Light vehicle (LV) fire control panel











Installation and maintenance manual

© 2018 Kidde Australia Pty Ltd

About this manual

Kidde Australia Pty Ltd ("Kidde") assumes no responsibility for the application of any systems other than those addressed in this manual. The technical data contained herein is limited strictly for informational purposes only.

All information contained in this manual is based on the latest product information available at the time of preparation and Kidde reserves the right to make changes at any time without notice.

Kidde believes this data to be accurate, but it is published and presented without any guarantee or warranty. Kidde disclaims any liability for any use that may be made by the data and information contained herein by any party.

Important Systems **must only** be designed, installed, and commissioned by **technicians accredited** by Kidde.

No part of this manual may be reproduced, stored in a retrieval system, or transmitted in any form or by any means, electronic, mechanical, photocopying, or otherwise without the prior written approval of Kidde Australia Pty Ltd.

For further information, contact Kidde Australia Pty Ltd. ACN 006 252 428:

- Telephone on: **1800 672 171**
- Internet at: **www.kidde.com.au**
- Technical support portal: **www.kidde.zendesk.com**

StatX® is a registered trademark. Manufactured in the USA and sold worldwide exclusively by Fireaway LLC under licence from Techno-TM, LLC

© 2018 Kidde Australia Pty Ltd

Revision

Revision	Notes
1.0	Initial release
2.0	New template Updated and added new graphics and images Added “Typical system operation” flowchart Updates associated with Firmware V 1.0-2 Added section “External manual releases (EMR)” Added section “Engine shutdown relay” Added section “Anti-tamper seal” Added section “Terminal interface” Added Maintenance Report
3.0	Added “Engine Shutdown Output” configurable Added “hybrid” to “Engine Shutdown Output” configurable activation mode Added “FIRE SYSTEM DISCHARGE switch” configurable Added LV bracket to components Updated time to turn off power from the internal backup battery from 72 to 24 hours Added section “Hybrid Operating Mode” Added section “HYBRID operating mode” in “Terminal Interface Added check for hybrid operating mode in commissioning checklist Added Maintenance Isolate via Keypad function

© 2018 Kidde Australia Pty Ltd

Contents

About this manual ---- 2
Revision ---- 3
Contents ---- 4

LV panel overview ---- 6

Introduction ---- 7
Immunity to electromagnetic interference ---- 7
Features and specifications ---- 8
Shutdown relays and auxiliary outputs ---- 10
Typical system operation ---- 10
Overview of LV panel operation ---- 11
Visual and audible indications ---- 11
User controls ---- 14
Power conservation mode ---- 16
Fire detection, control and alarm components ---- 17

Installation guidelines ---- 20

LV panels and power supply ---- 21
Accessories ---- 22
Changing the cable entry position ---- 23
Pin connections ---- 25
Wire gauge size ---- 26
Linear heat detection cable ---- 27
Installing LHD cable ---- 28
External manual releases (EMR) ---- 30
Installing external manual releases ---- 31
Multiple external manual releases ---- 34
Installing a discharge confirmation switch ---- 34
Installing Stat-X® aerosol generators ---- 34
Engine shutdown relay ---- 35
Installing an external engine shutdown relay ---- 35
Auxiliary output ---- 35
Anti-tamper seal ---- 36
Hybrid Operating Mode ---- 36

Panel configuration settings ---- 38

Configuration settings using DIP switches ---- 39
Engine shutdown delays ---- 39
Discharge delays ---- 40

© 2018 Kidde Australia Pty Ltd

Auto or manual system discharge ---- 41
System isolate ---- 41
Terminal interface ---- 42
HYBRID operating mode ---- 42

Commissioning ---- 44

Commissioning LV panels ---- 45
Minimum commissioning checks ---- 45

Maintenance ---- 46

Routine service schedules ---- 47
Daily schedule ---- 47
Six-monthly schedule ---- 48
Yearly schedule ---- 49
Replacing the internal battery ---- 50
Replacing the battery without primary power connected ---- 50
Replacing the battery with primary power connected ---- 51
Reset procedures ---- 52

Troubleshooting LV panels ---- 54

LV panel firmware ---- 55
Fault indications ---- 56
Fault diagnostics ---- 57
Primary power fault ---- 57
Other faults ---- 58
Example – Using the fault diagnostic function ---- 59
Fault diagnostic table ---- 60
Hardware and firmware faults ---- 61

Appendices ---- 62

Wiring diagram ---- 63
Vehicle system commissioning checklist ---- 64
Vehicle system commissioning report ---- 66
Service report ---- 68
Feedback form ---- 70

© 2018 Kidde Australia Pty Ltd

LV panel overview

This section contains information about:

— **Features and specifications**, see page **8.**
— **Overview of LV panel operation**, see page **11.**
— **Fire detection, control and alarm components,** see page **17.**

© 2018 Kidde Australia Pty Ltd

Introduction

The light vehicle (LV) panel (Part No. 001-926) has been designed and tested to meet the requirements of AS 5062, *Fire protection of mobile and transportable equipment*.

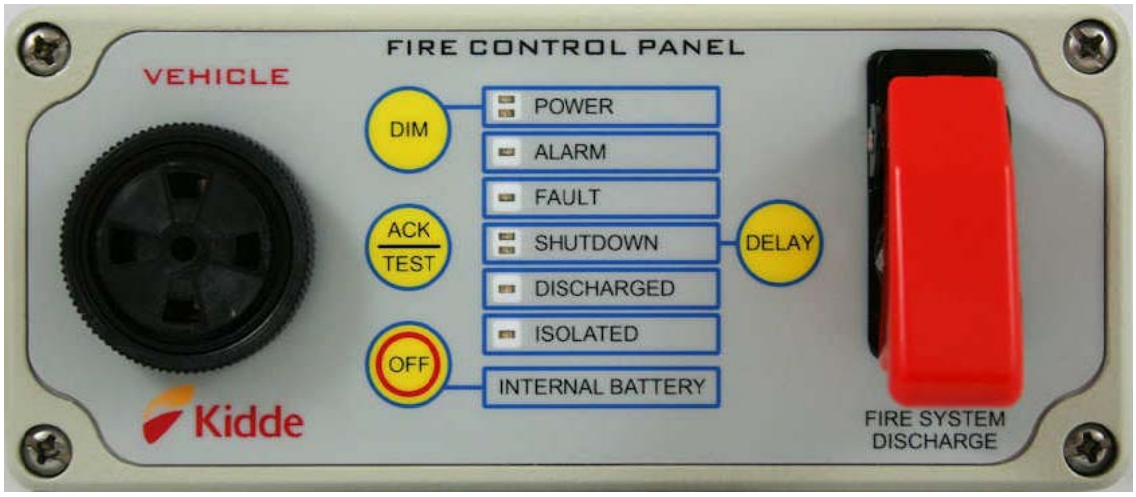

Figure 1: Light vehicle (LV) panel

It incorporates visual and audible alarms and manual controls in a single, weatherproof enclosure and is suited for use in small vehicles, such as, four wheel drive (4WD), forklifts, generator sets and other mobile equipment. The LV panel:

- Supports automatic fire detection, alarm and control of the fire suppression system.
- Incorporates a manual discharge switch (fire system discharge) to allow the manual operation of the fire suppression system.
- Supports HYBRID operating mode, the system switches automatically between manual and auto discharge modes based on the status of the external backup power input (firmware V1.0-3)
- Display provides visual indications of system status.
- Allows manual extension of the equipment shutdown delay.

Immunity to electromagnetic interference

Most industrial environments produce high levels of electrical noise, so the LV panel has been compliance tested for immunity to electromagnetic interference against the requirements of Australian Standard AS 61000.6.2:2006, *Electromagnetic compatibility (EMC) – General standards – Immunity for industrial environments*.

To minimise the effects of electromagnetic emissions from high energy sources, the wiring for the LV panel should **not** be run parallel, or in close proximity to any cables or equipment that may produce high levels of RF (radio frequency) energy. For example, cabling for RF transceiver antennas, inverters, motors etc.

© 2018 Kidde Australia Pty Ltd

Features and specifications

The table below lists the features and specifications of LV panels.

Light Vehicle Panel: Features and Specifications		
Feature	**Description**	
Battery back-up	Field replaceable, non-rechargeable, 9 V lithium battery.	
Electrical field connections	IP65-rated Deutsch DT series connectors.	
Enclosure	IP65-rated metal enclosure.	
Operating temperature	-10°C to 60°C	
Event log	600 events.	
Indications	**ALARM** – **red** LED **Buzzer** **DISCHARGED** – **red** LED **FAULT** – **amber** LED	**ISOLATED** – **amber** LED **POWER** – **FAULT** **amber** LED **POWER** – **ON** **green** LED **SHUTDOWN** – **amber** and **red** LEDs
Inputs	– **1 detection** input ▪ **Supported detectors**: LHD cable, external manual release units and thermal probes. ▪ **Line supervision:** open circuit (Enabled by default) and earth faults ▪ **End of Line:** 1KΩ +/- 5%, 0.25W resistor – **1 discharge** confirmation input (latching, volt free) ▪ **Line supervision:** open circuit (disabled by default), short circuit (disabled by default) and earth faults ▪ **Input polarity:** Normally closed (default) or normally open ▪ **End of Line (Optional):** 1KΩ +/- 5%, 0.25W resistor	
Outputs	– **1 auxiliary** output ▪ **Type:** Form-C, SPDT (change-over) latching relay output ▪ **Nominal switching capacity:** 2A, 30VDC ▪ **Maximum switching power:** 60W, 125VA ▪ **Maximum switching voltage:** 48VDC ▪ **Maximum switching current:** 2A ▪ **Configurable activation events:** Fault, alarm (default), fault or alarm, fault or alarm or isolate. – **1 Engine shutdown** output ▪ **Type:** Form-C, SPDT (change-over) latching relay output ▪ **Nominal switching capacity:** 2A, 30VDC ▪ **Maximum switching power:** 60W, 125VA ▪ **Maximum switching voltage:** 48VDC ▪ **Maximum switching current:** 2A ▪ **Configurable:** Enable (default), Disable ▪ **Configurable delay periods (seconds):** 0 (default), 5, 10, 15, 20, 30, 40 and 60	

© 2018 Kidde Australia Pty Ltd

Light Vehicle Panel: Features and Specifications	
Feature	**Description**
	– **1 Actuation** output ▪ **Type:** Stat-**X**® output ▪ **Line supervision:** open circuit (enabled by default) and earth faults ▪ **Maximum number of Stat-X® supported:** 5 in series ▪ **Configurable activation mode:** manual or automatic (default) or hybrid ▪ **Configurable activation delay:** 0 (default), 5, 10, 15, 20, 30 and 40 seconds, **OR** to coincide with engine shutdown output operation.
Power supply	– **Nominal** 12 or 24 V DC ▪ **Minimum:** 8V DC ▪ **Maximum:** 30V DC ▪ **Maximum current:** 2A.

Table 1: LV Panel Features and Specifications

© 2018 Kidde Australia Pty Ltd

Shutdown relays and auxiliary outputs

The table below lists the specifications for the LV panel shutdown and auxiliary outputs.

Shutdown and Auxiliary Output: Specifications	
Feature	**Description**
Type	Latching
Contact arrangement	Form-C, SPDT (change-over)
Nominal switching capacity	2 A, 30 V DC
Maximum switching power	60 W, 125 V A
Maximum switching voltage	48 V DC
Maximum switching current	2 A

Table 2: Shutdown and Auxiliary Output Specifications

Note If **more** than 2 amp switching current capacity is required for the shutdown circuit, an external shutdown relay **must** be installed. See **Installing an external engine shutdown relay**, page **35.**

Typical system operation

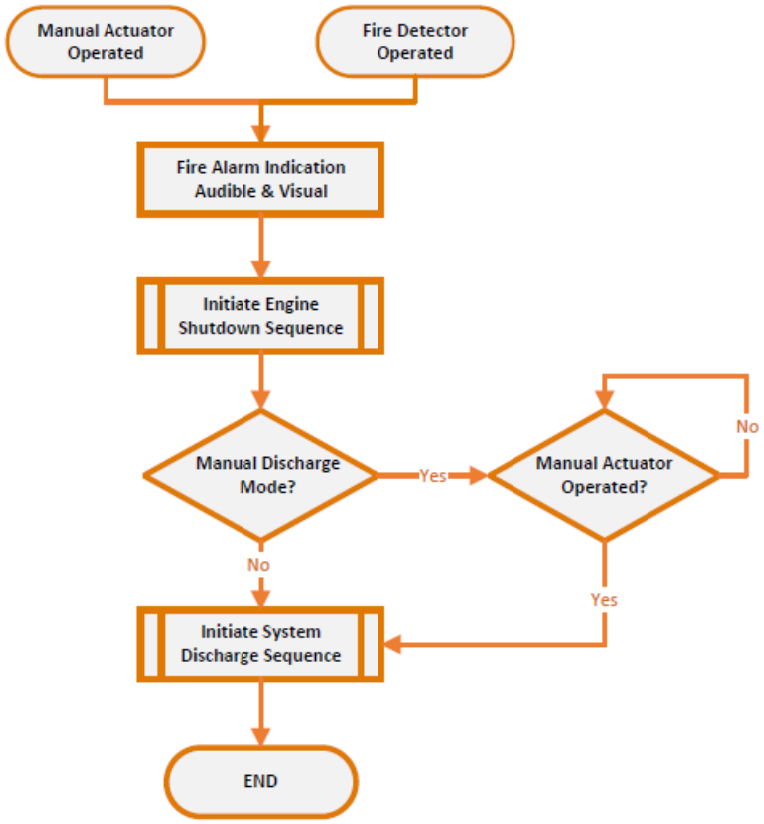

Figure 2: Typical system operation

© 2018 Kidde Australia Pty Ltd

Overview of LV panel operation

The table below lists the **LED** and **audible indications** as well as the **controls** fitted to LV panels, and describes the operation and functionality of each.

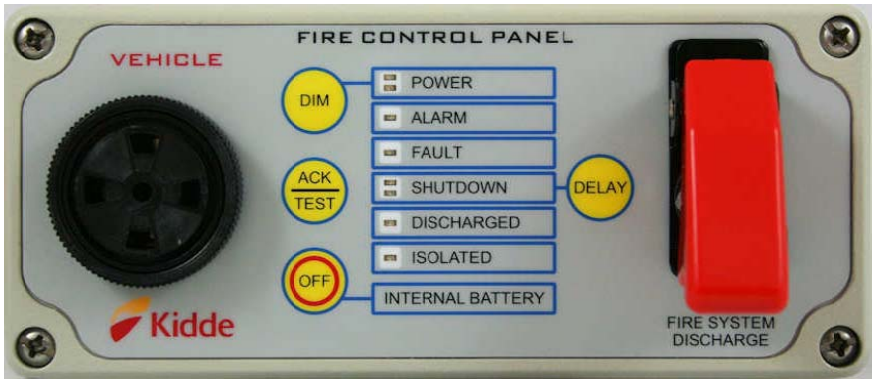

Figure 3: Light vehicle (LV) panel indicators and controls

Visual and audible indications

LED Indicators	Description
	The **green POWER** LED illuminates when primary power supply is present.
	**Loss** of primary power causes: – **Green POWER** LED to turn off. – Panel **buzzer** to sound once every 10 seconds. – **Amber POWER** and **amber FAULT** LEDs to illuminate for 10 seconds. – The panel then enters into **power conservation mode** – in this mode the **amber FAULT** LED illuminates and the buzzer sounds once every 10 seconds. **Note** Pressing **any** key whilst the in **power conservation mode** causes both the **amber POWER** and **amber FAULT** LEDs to *reilluminate* for 10 seconds. The panel will automatically exit power conservation mode once primary power is restored.

© 2018 Kidde Australia Pty Ltd

LED Indicators	Description
	An **ALARM** condition **occurs** when: – Any detection device operates. – **FIRE SYSTEM DISCHARGE** switch or any external manual release (EMR) unit is operated. An **ALARM** condition **causes**: – **Red ALARM** LED to illuminate. – Panel **buzzer** to sound once per second. – Auxiliary output to operate (default configuration). – Engine shutdown timer to commence (default setting is 0 seconds). – Discharge output to operate (if configured for automatic operation) **after** the expiry of the discharge delay period (default setting is 0 seconds). The panel will remain in **ALARM** condition until manually reset. **Note** To conserve battery life, when the panel is operating off the **internal backup battery**, the red **ALARM** LED will flash on and off once every 10 seconds .
	A **FAULT** condition **causes**: – **Amber FAULT** LED to illuminate. – Panel **buzzer** to sound once every 10 seconds. – Auxiliary output to operate (if so configured).
	The outputs from the panel can be **isolated** to allow for: – **Testing or maintenance** without causing the discharge of the system, initiating equipment shutdown or operation of the auxiliary output. – **Shutdown output** to be reset to allow the vehicle to be restarted, following a shutdown sequence. The panel can be isolated or de-isolated by either: - Activating the **SYSTEM ISOLATE** switch located on the PCB inside the panel enclosure. See **System isolate**, on page 41. OR - Press and hold down **OFF** & **DELAY** buttons for **5 seconds** Activating the **SYSTEM ISOLATE** switch causes the: – **Amber ISOLATED** LED to illuminate. **Note** If the panel is isolated whilst operating from the **internal backup battery**, the **amber ISOLATED** LED indicator will flash on and off once every 10 seconds. – Discharge, shutdown and auxiliary outputs to be isolated (or reset). – Panel **buzzer** to sound **once** every 60 seconds. **Note** All **inputs** and indicators, **remain enabled** when the panel is **ISOLATED**. **Note** The **SYSTEM ISOLATE** switch on the PCB will have precedence over the keypad isolate facility. If the DIP switch is set (ON), it will not be possible to de-isolate the system using keypad.

© 2018 Kidde Australia Pty Ltd

LED Indicators	Description
	An alarm condition or the operation of the manual **FIRE SYSTEM DISCHARGE** switch will initiate the engine shutdown sequence and cause: – **Amber SHUTDOWN** LED to illuminate. – Shutdown timer to commence. – During the **final 10 seconds** of the shutdown delay period: ▪ **Amber SHUTDOWN** LED will flash to indicate that shutdown is imminent. ▪ Panel **Buzzer** sounds continuously.
	At the **end** of the shutdown delay period: ▪ **Amber SHUTDOWN** LED turns off. ▪ **Red SHUTDOWN** LED illuminates. ▪ Shutdown output operates. ▪ Panel **Buzzer** sounds once every 10 seconds. **Red SHUTDOWN** LED remains illuminated until the panel is reset. **Note** The default shutdown delay setting is **0 seconds**. In this setting, the **red SHUTDOWN** LED will illuminate **immediately**
	A **DISCHARGED** condition is **initiated** when the discharge confirmation input and discharge output have **both** operated. A **DISCHARGED** condition **causes** the **red DISCHARGED** LED to illuminate. The **DISCHARGED** indicator will remain illuminated until the panel is reset.

Table 3: Visual (LED) and Audible Indicators

© 2018 Kidde Australia Pty Ltd

User controls

Controls	Functionality
	**Dim Function** Used to adjust the brightness of the LED indicators to suit changing light conditions. Holding down the **DIM** button adjusts the LED intensity. Note **DIM** LED intensity can only be adjusted when there are *no* **FAULT** conditions present **Fault Diagnostic Function** Holding down the **DIM** button **while** the panel is in a **FAULT** condition, initiates fault diagnostic mode. See **Fault diagnostics**, page **57.**
 **Combination Acknowledge and Test function**	**Test function** Used to **test** the operation of all LED **indicators**, the panel **Buzzer** and auxiliary output. Pressing the **ACK|TEST** push button causes: – All LED indicators to illuminate. – Panel buzzer to sound continuously. – Auxiliary output to operate if configured to operate on **FAULT** events. Note Test function can only be performed when the panel is in an 'idle state' – when **no** fault or alarm conditions exist. **Acknowledge function** Used to **acknowledge** any fault or alarm conditions, silence the panel **Buzzer** and to reset auxiliary output. Press the **ACK|TEST** button for **2 seconds**. Note The panel **Buzzer** operation and operation of the auxiliary output remains **suppressed** for 60 minutes **unless** a new fault or alarm is detected. At the end of this period, the **FAULT** or **ALARM** can be **acknowledged** for a further 60 minutes.
	Used to delay the operation of the engine shutdown output by a pre-set period (default delay extension is equal to the selected shutdown delay). The **DELAY** push button: – By default, can only be used to delay the operation of the shutdown output **once**, in order to comply with AS5062. – Is only enabled in the **final 10 seconds** of the shutdown delay period (indicated by continuous sounding of the panel buzzer and flashing of the amber **SHUTDOWN** LED). Note The **DELAY** button is enabled **immediately** for shutdown delay time periods set for either 5 or 10 seconds. – Can only be operated **once** when the discharge output is configured to operate coincidentally with the shutdown output. See Table 10: **Discharge delays**, page **40.** For other discharge output configurations, the **DELAY** push button can be programmed to operate repeatedly to extend the shutdown delay period.
 **Internal battery control**	Used to turn the panel **off**, if desired, when the panel is powered by the **internal backup battery**. The **OFF** push button: – Is **only** enabled when the primary power supply to the panel is **lost**. – Must be held down for 5 seconds to turn the panel off. The panel turns back **on** automatically when the primary power supply is restored.

© 2018 Kidde Australia Pty Ltd

Controls	Functionality
 **FIRE SYSTEM DISCHARGE switch**	Used to manually discharge the fire suppression system. Operation of the **FIRE SYSTEM DISCHARGE** switch causes: **Red ALARM** LED to latch on. **Red SHUTDOWN** LED to illuminate (default configuration). Panel **Buzzer** to sound once every second. Auxiliary output to operate (default configuration). Discharge output to operate. Configurable in **Terminal interface (firmware V1.0-3)**: Enable (default), Disable **Note** For LV panels using **V1.0-2 firmware**, the discharge output is programmed to operate *immediately* when the **FIRE SYSTEM DISCHARGE** switch (or an external manual release – EMR) is operated. It is possible to configure a discharge delay when the **FIRE SYSTEM DISCHARGE** switch (or an EMR) is operated using the LV panel RS 232 serial port connection. Refer to **Terminal interface** on page **42** for further information. For LV panels using firmware versions **prior** to **V1.0-2 firmware**, operation of the **FIRE SYSTEM DISCHARGE** switch (or EMR) causes the discharge output to operate only **after** the discharge delay period expires (default delay 0). Refer to **LV panel firmware** on **page 55** for information on determining firmware version.
 and  **System reset function**	Used to reset the panel following a **FAULT** or **ALARM** condition. A **system reset** is achieved by pressing the **DIM** and **ACK|TEST** buttons at the same time for at least **2 seconds**. See **Reset procedures**, page **52** for further information on reset procedures.
 and 	Used to isolate the panel. A **panel isolation** is achieved by pressing the **OFF** and **DELAY** buttons at the same time for at 5 **seconds**. See **Visual and audible indications,** page 12 for further information on isolating the panel.

Table 4: User Controls

© 2018 Kidde Australia Pty Ltd

Power conservation mode

If the primary power supply is interrupted the LV panel will:

— Continue to operate using its **internal backup battery**.

— Automatically enter **power conservation mode** *after* 10 seconds.

> **Important** If the panel is in **alarm** at the time primary power is lost, the panel will **not** enter **power conservation mode** until 10 seconds **after** the alarm, discharge and shutdown sequence has been completed.

In **power conservation mode**:

— **Green POWER** LED and amber **POWER** LED indicators remain off.

— The panel condition (system status) is indicated by the sounding of the buzzer and the display of the **ALARM**, **FAULT**, **SHUTDOWN**, **DISCHARGED** and **ISOLATED** indicators (as appropriate) at 'half brightness' for 1 second every 10 seconds.

Any of the following events will cause the panel to *exit* **power conservation mode**:

— Primary power is restored.

— An **ALARM** condition.

— Any push button on the panel fascia is pressed.

Note By default, the LV panel is configured to turn off power from the internal backup battery 24 hours after the loss of the primary power supply. This period can be configured to a different value, if desired.

Adjusting the backup battery operating period requires the use of a computer connected to the RS 232 serial port of the LV panel.

© 2018 Kidde Australia Pty Ltd

Fire detection, control and alarm components

Part numbers for the LV panel and associated components are listed in the table below.

Fire Detection, Control and Alarm Components		
Part	**Part Number**	**Description**
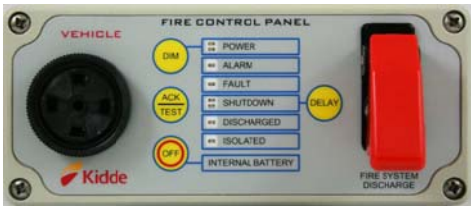	001-926	Light vehicle (LV) panel
	47129	External manual release (EMR) for LV panel
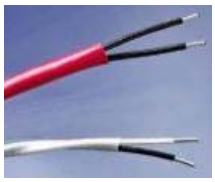	H8069	LHD cable Red – 177 to 189°C (Max. ambient temp – 105°C)
	H9650	LHD cable White – 229 to 251°C (Max. ambient temp – 200°C)
 **Note** GKW cable has smaller insulation and is more flexible than FR cable.	87060	Two core, GKW, fire-rated cable
	87061	Four core, GKW, fire-rated cable
	103198	P-clip 19 mm
	90950	Rubber grommet suits LHD or GKW twin core cable (Use with P-clip 103198)
	103248	Rubber grommet – suits GKW four core cable (Use with P-clip 103198)

© 2018 Kidde Australia Pty Ltd

Fire Detection, Control and Alarm Components		
Part	**Part Number**	**Description**
	128819	P-clip 6 mm – suits GKW twin core cable
	001-987.1	End-of-line module for use with LV and VS-MKII panels (Mount using P-clip 103198)
	001-988.1	In-line brass enclosure with connector block
	14590	E-match Tester (commissioning & test part)
	136003	Temp indicator sticker 40-71°C Series A (10 indicators in Pack)
	136004	Temp indicator sticker 77-116°C Series B (10 indicators in Pack)
	136007	Temp indicator sticker 121-160°C Series C (10 indicators in Pack)
	136005	Temp indicator sticker 166-204°C Series D (10 indicators in Pack)
	136006	Temp indicator sticker 210-260°C Series E (10 indicators in Pack)
	001-987.3	1 k ohm end-of-line resistor assembly for use with LV and VS-MKII panels (service part)
	020-044	9 V Lithium battery for LV panel (service part)
	001-929	LV / MV Test box

© 2018 Kidde Australia Pty Ltd

Fire Detection, Control and Alarm Components		
Part	**Part Number**	**Description**
	255-982	Cable RS232 – used to connect a computer to LV/MV/VS MKII panels for advanced configuration and maintenance tasks
	USB-232-1	USB to RS232 converter
	132445	Sounder/Strobe (red lens) – 9-15 V
	31015F	Sounder/Strobe (red lens) – 18-30 V
	132830	Sounder/Strobe (amber lens) – 9-15 V
	132831	Sounder/Strobe (amber lens) – 18-30 V

Table 5: Fire Detection, Control and Alarm Components

© 2018 Kidde Australia Pty Ltd

Installation guidelines

This section contains information about:

— **LV panels and power supply,** see page **21.**
— **Accessories** see page **22.**
— **Changing the cable entry position**, see page **23.**
— **Pin connections**, see page **25.**
— **Wire gauge size,** see page **26.**
— **Linear heat detection cable,** see page **27.**
— **External manual releases (EMR),** see page **30.**
— **Installing a discharge confirmation switch,** see page **34.**
— **Installing Stat-X® aerosol generators,** see page **34.**
— **Engine shutdown relay,** see page **35.**
— **Auxiliary output,** see page **35.**
— **Anti-tamper seal,** see page **36**.

© 2018 Kidde Australia Pty Ltd

LV panels and power supply

LV panels should be installed in a position that is visible and accessible to the vehicle or equipment operator.

Check that the intended installation location:

- Provides access for operational and maintenance purposes.
- Provides protection from damage.
- Is isolated from high-power RF (radio frequency) equipment.
- Complies with Kidde specifications and customer requirements.



Figure 4: Example of a suitable location

Secure the panel using the four ø9.5mm corner mounting holes as shown in **Figure 5**:

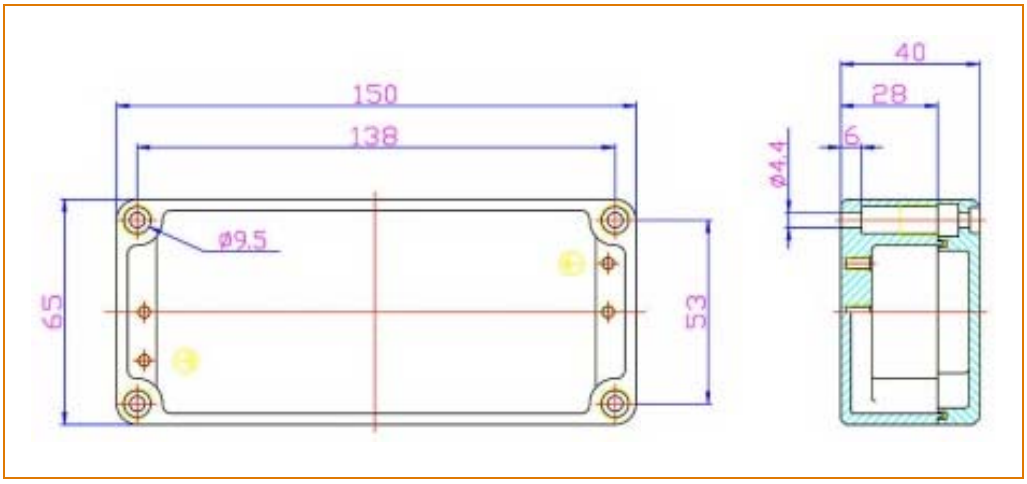

Figure 5: Panel dimensions and mounting holes

Use bolts that have thread diameter **no** greater than 4.4 mm and a head diameter **no** greater than 9.5 mm.

Important **Drilling holes through the enclosure wall to mount the panel will** compromise **its IP rating and** void **the warranty.**

The power supply for the LV panel must:

- Be connected using fire-rated cables.
- Include an in-line, 2 A fuse on **both** the positive (+) and negative (–) lines.

Note Installation of a fuse in the negative (–ve) line prevents excessive return current passing through the LV panel in the event that one of the panel inputs or outputs is shorted to the to an external high power circuit

© 2018 Kidde Australia Pty Ltd

It is **preferred** that the LV panel be connected **directly** to the vehicle battery. However, it is permissible to connect power via the vehicle ignition circuit or vehicle isolate switch.

LV panels are shipped from the factory with the internal backup battery **disconnected**. At full capacity the non-rechargeable battery provides 72 hours of emergency power supply in the event that primary power is lost or isolated. This battery **must** be connected during the installation process as shown in **Figure 6.**

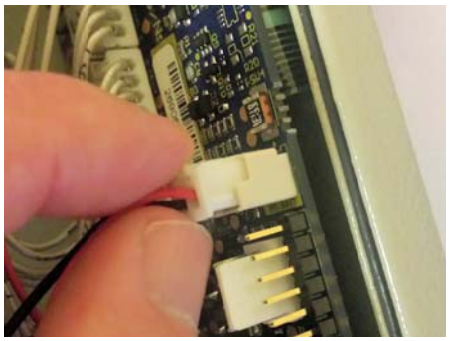

Figure 6: Connecting the battery

The LV panel **real-time clock** (RTC) **must** be set during commissioning. Setting the RTC requires the use of a computer connected to the RS 232 serial port of the LV panel. Refer to **Terminal interface** on page **42** for further information.

Accessories

- Each panel is supplied with a set of mating Deutsch connectors, connector pins, plugs, 4 x fibre washers and an anti-tamper seal.
- The fibre washers are used if changing the entry position of the fly leads into the panel enclosure.
- The anti-tamper seal is provided to fit to the **FIRE SYSTEM DISCHARGE** switch cover (missile switch cover) once installation and commissioning of the system has been completed.



Figure 7: LV panel 4-way and 12-way Deutsch DT series connectors



Figure 8: Mating Deutsch connectors, pins, plugs and anti-tamper seal

© 2018 Kidde Australia Pty Ltd

Changing the cable entry position

LV panels are supplied with 2 x 400mm fire-rated cable fly leads fitted with Deutsch DT series connectors entering the rear of the panel enclosure.

If required, the fly leads can be reconfigured to enter through the bottom of the enclosure.

To change the cable entry position, complete the following:

1 Remove the front of the panel enclosure by unscrewing the 4 screws.

Loosen both cable entry glands to remove some of the tension on the cables and allow the cover to open easily.



Figure 9: Opening panel enclosure

2 Check for markings on the PCB connectors **before** disconnecting so as to ensure that the connectors can be reconnected in their **correct** positions.

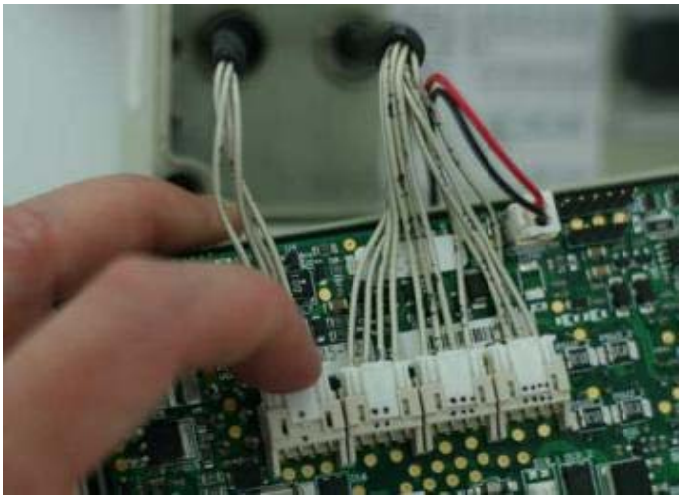

To remove PCB connectors, push down on the clip on the top of the connector, whilst at the same time, pulling the connector from the board.

Figure 10: PCB connectors

© 2018 Kidde Australia Pty Ltd

3 Slide the cable gland nuts and inserts back and unscrew the nuts on the cable gland fitting with a 17 mm spanner.

Pull the cables through the openings and remove the blanking plugs from the other enclosure entry points.



Figure 11: Removing cable glands and blanking plugs

4 Fit **2 x** fibre washers to **each** blanking plug and screw the blanking plugs back into the **rear holes** of the panel enclosure (from inside the enclosure).

Note The fibre washers are used so that the threads of the blanking plugs do **not protrude** from the panel enclosure.



Figure 12: Fitting 2 x fibre washers and blanking plugs fitted inside enclosure rear entry holes

© 2018 Kidde Australia Pty Ltd

5 Fit the cable gland fittings into bottom holes of the panel enclosure:

- Re-attach the cable connectors to the PCB.
- Tighten the cable gland nuts.

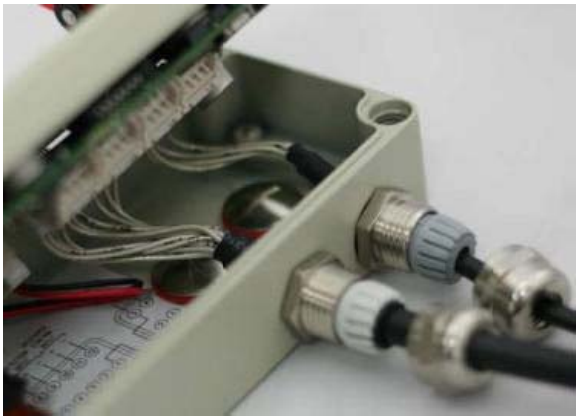

Figure 13: Re-installing cable connectors and re-fitting cable glands

Pin connections

To complete field wiring, each panel is supplied with mating Deutsch connectors. The diagram in Figure 14:, showing the pin assignments for each connector, is also included on a label located inside the panel enclosure.

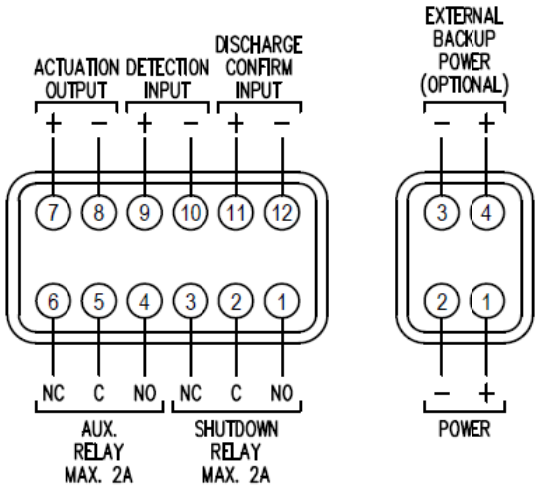

Figure 14: Connector pin assignments

Important To **maintain** the IP rating of the connectors, **ensure** that blanking plugs are fitted to **any** *unused* cable entries.

© 2018 Kidde Australia Pty Ltd

The pin connections for each fly lead are:

— **4-way** series connector

4-Way Deutsch Connector		
Function	**Pin Number**	**Polarity**
Primary power **input**	**1**	**+ve**
	2	**–ve**
External backup power **input** (optional)	**3**	**–ve**
	4	**+ve**

Table 6: 4-Way Deutsch connector pin assignments

— **12-way** series connector

12-Way Deutsch Connector		
Function	**Pin Number**	**Polarity**
Engine shutdown **output**	**1**	**N/O**
	2	**COM**
	3	**N/C**
Auxiliary **output**	**4**	**N/O**
	5	**COM**
	6	**N/C**
Actuation **output**	**7**	**+ve**
	8	**–ve**
Detection **input**	**9**	**+ve**
	10	**–ve**
Discharge confirmation **input**	**11**	**+ve**
	12	**–ve**

Table 7: 12-Way Deutsch connector pin assignments

Important If **more** than 2 amp switching current capacity is required for the shutdown circuit, an external shutdown relay **must** be installed. See **Installing an external engine shutdown relay**, page **35**.

Wire gauge size

The recommended wire gauge size for all power, inputs and outputs of the LV panel is:

Area (mm^2)	AWG size	Current Capacity (A)
0.75	**18**	**6**

Table 8: LV panel wire gauge size

© 2018 Kidde Australia Pty Ltd

Linear heat detection cable

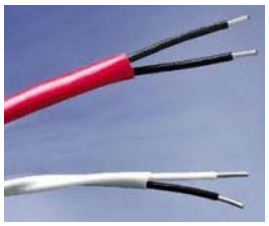

Figure 15: Linear heat detection cables

Linear heat detection cable (LHD) consists of two insulated conductors twisted together and sheathed in a PVC outer casing.

LHD cable senses a fire anywhere along the length of the cable when it is heated above its **alarm temperature**.

At its alarm temperature the insulation around the conductors melts, allowing the conductors to touch and create a short circuit that initiates a fire alarm.

Note LHD cable is **non-resettable**. Once the insulation has melted, the cable (or damaged section) **must** be replaced.

There are two types of LHD cable available:

— **Standard** temperature application LHD cable (Part No. H8069 – red outer casing) with an alarm temperature range: **177** to **189°C**.

Maximum **allowable** ambient temperature: **105°C**.

— **High** temperature application LHD cable (Part No. H9650 – white outer casing) with an alarm temperature range: **229** to **251°C**.

Maximum allowable ambient temperature: 200**°C**.

Important If the ambient temperature of the hazard being protected is **not** known, conduct an **ambient temperature survey** *before* installing LHD cable.

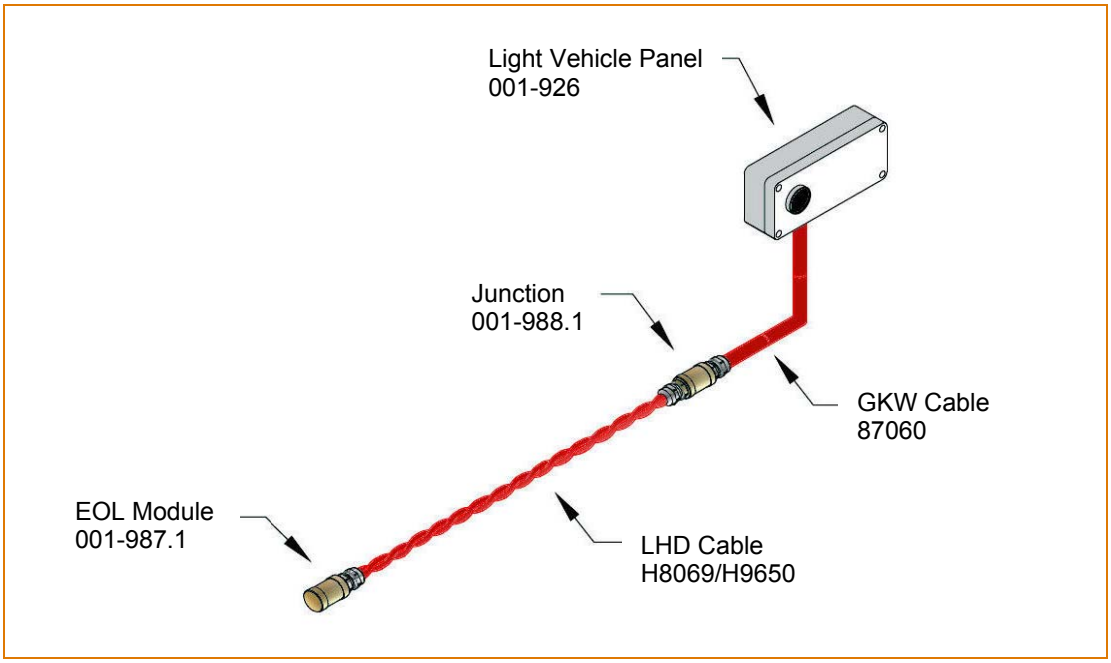

Figure 16: Detection components

© 2018 Kidde Australia Pty Ltd

Installing LHD cable

When installing LHD cable, make sure that it is:

- Positioned to provide **optimum** fire detection.
- Located **above** the fire hazards.
- Do **not** position the LHD cable where it will be exposed to temperatures in **excess** of its **maximum** allowable ambient temperature.
- Adequately clamped at distances **no greater than 500 mm** between each clamp.
- Installed with a **bending radius** of **not less** than **50 mm**.
- Where LHD cable is required to pass through a firewall or partition, a **cable gland** or **flange mount connector** must be used in the penetration to ensure that the cable is protected from abrasion.



Figure 17: LHD cable installed using 19 mm P-clips (Part No. 103198) and rubber grommets (Part No. 90950)

To connect LHD cable, complete the following:

1 Cut the LHD cable to the desired length(s) and strip the insulation back on all ends ready for termination.



Figure 18: Strip the insulation back on all ends ready for termination

© 2018 Kidde Australia Pty Ltd

2 Terminate **one end** of the LHD cable with an end-of–line (EOL) module (Part No. 001-987.1):

- Resistor value: 1000 ohm (1 k), ¼ watt.
- Pass **one end** of the LHD cable through the EOL gland.
- Connect EOL resistor to cable using the screw connectors.



Figure 19: End-of-line resistor connected to LHD cable

3 Screw the cable gland into the brass housing and tighten the gland.



Figure 20: EOL module connected to LHD cable

4 Mount the EOL module using a 19 mm P-clip (Part No. 103198).



Figure 21: EOL housing mounted in a P-clip

Note If installing an **external manual release** (EMR) at the **end** of the detection circuit, the EOL built in to the EMR may be used **instead** of installing a separate EOL module. See **Installing external manual releases,** page **31**.

© 2018 Kidde Australia Pty Ltd

5 Connect the **opposite end** of the LHD cable into an in-line brass enclosure (Part No. 001-988.1) or junction box.



Figure 22: In-line brass enclosure with connector block used to join LHD to fire-rated cable

6 Using a length of fire-rated cable, connect the LHD cable to pins 9 and 10 of the LV panel 12-way connector

External manual releases (EMR)



Figure 23: EMR

The external manual release (Part No. 47129) unit consists of an IP65 rated metal enclosure. Two M18 cable glands and two bolts are also provided with each unit. It incorporates a switch fitted with a series and a parallel EOL resistor to allow it to be monitored by the LV panel for alarm and open faults conditions.

An EMR functions the **same** way as the **FIRE SYSTEM DISCHARGE** switch on the LV panel; however, the following limitations apply to the installation and use of EMRs:

— EMR's must not be installed in systems configured for **manual** discharge. See **Auto or manual system discharge**

— on page **41**.

— When both LHD cable and EMRs are installed in a system, the EMRs will only function if they are operated **prior** to the LHD cable detecting a fire event.

If the LHD cable operates **prior** to any of the EMRs, the LV panel will perform its alarm and discharge sequence according to the configuration settings for a fire detection event (including programed discharge and shutdown delays).

© 2018 Kidde Australia Pty Ltd

Installing external manual releases

A maximum of two external manual release (EMR) units can be installed. EMR's should be installed in a position that is visible and accessible. Check that the intended location:

- Provides access for operational and maintenance purposes.
- Provides protection from damage.

EMR's are installed in parallel to the LHD cable on the detection circuit. The EMR's can be placed at any location in the circuit. Each EMR is supplied with 2 x flying leads for 'in' and 'out' connections to provide installation flexibility.

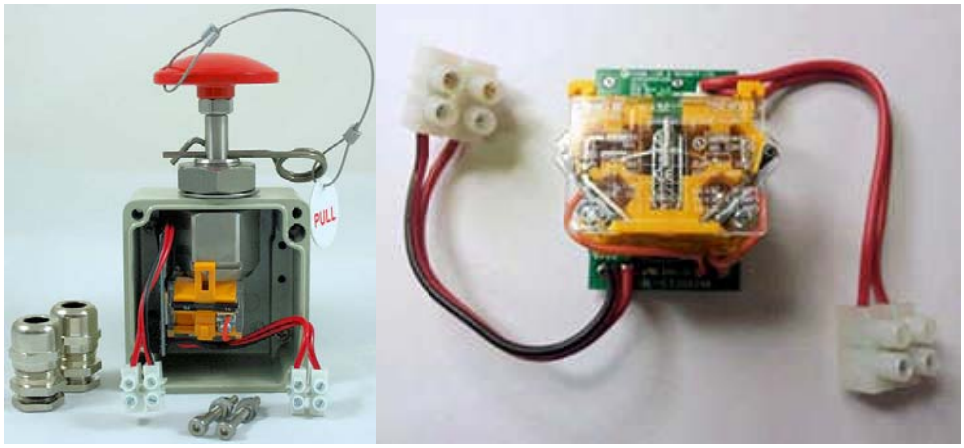

Figure 24: Inside the EMR

If the EMR is being installed as the **last** device on the detection circuit it can be used to provide the EOL resistor for the circuit, eliminating the need to install a **separate** end-of-line module. See **Figure 25** below:

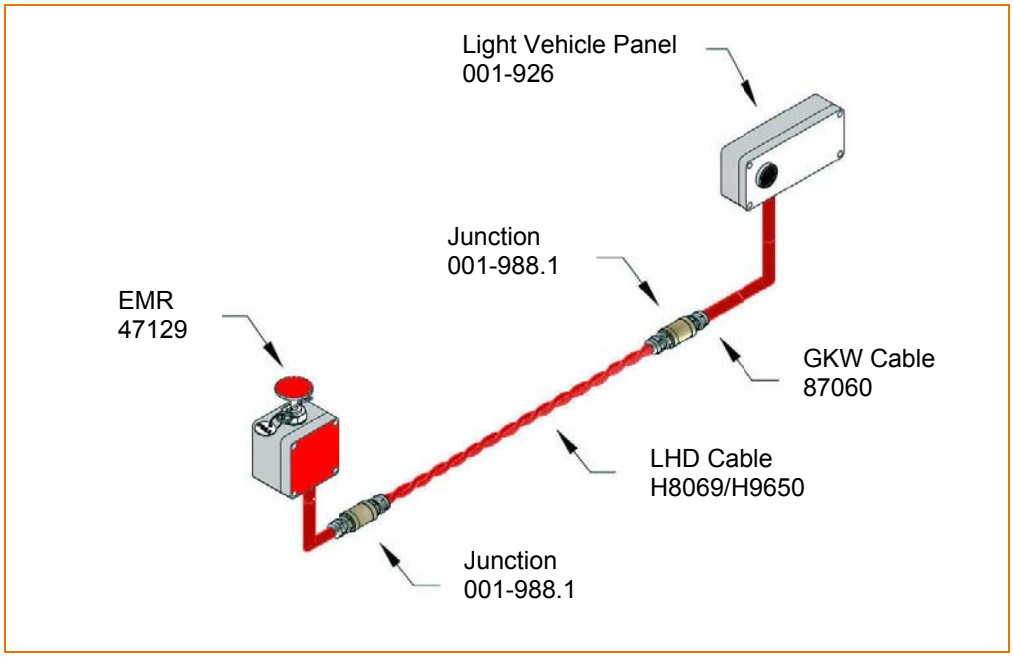

Figure 25: EMR as an EOL

© 2018 Kidde Australia Pty Ltd

For the arrangement shown in **Figure 25**, the EOL resistor **must** be switched into circuit by:

1 Opening the cover and loosening the locking nut.

2 Rotating the assembly until the PCB is facing out.

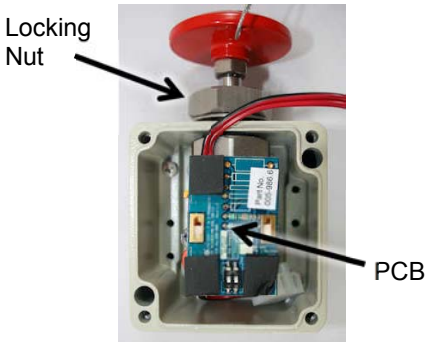

Figure 26: EMR PCB

3 Using a small flat bladed screwdriver to turn ON switch 1 as shown in **Figure 27**.

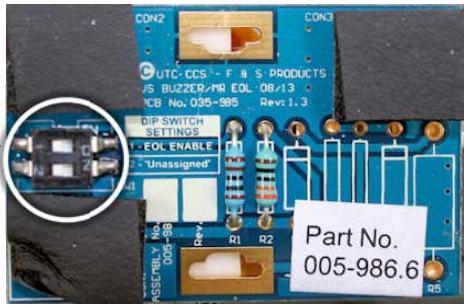

Figure 27: EMR PCB and Dip switches

4 To allow flexibility in cable routing, the cable glands are not factory fitted

To install gland(s);

- Remove the locking bolt with a star screwdriver.
- Using a flat bladed screwdriver, gently lever the plastic clips one at a time until the switch block assembly dislodges.
- Drill the required number of 16mm ø holes in the enclosure and fit the cable gland(s) - spanner tight
- Refit the switch block assembly and locking bolt then connect the field wiring.
- Re-position the assembly and re-tighten the locking nut.

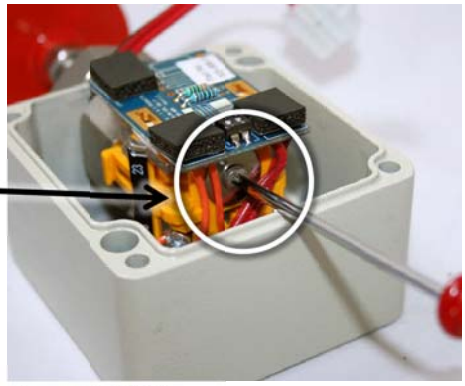

Figure 28: EMR Assembly locking bolt

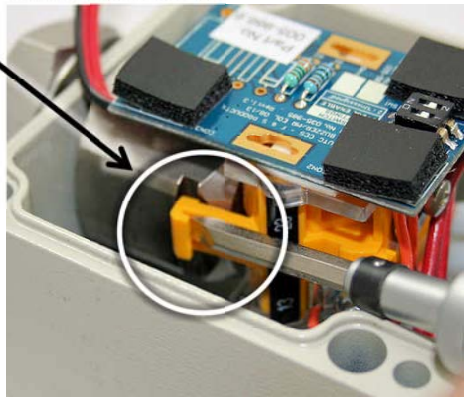

Figure 29: EMR Assembly clip

© 2018 Kidde Australia Pty Ltd

Secure the enclosure using four surface mounting holes shown on **Figure 30** or flush mount the unit as shown in **Figure 31.**

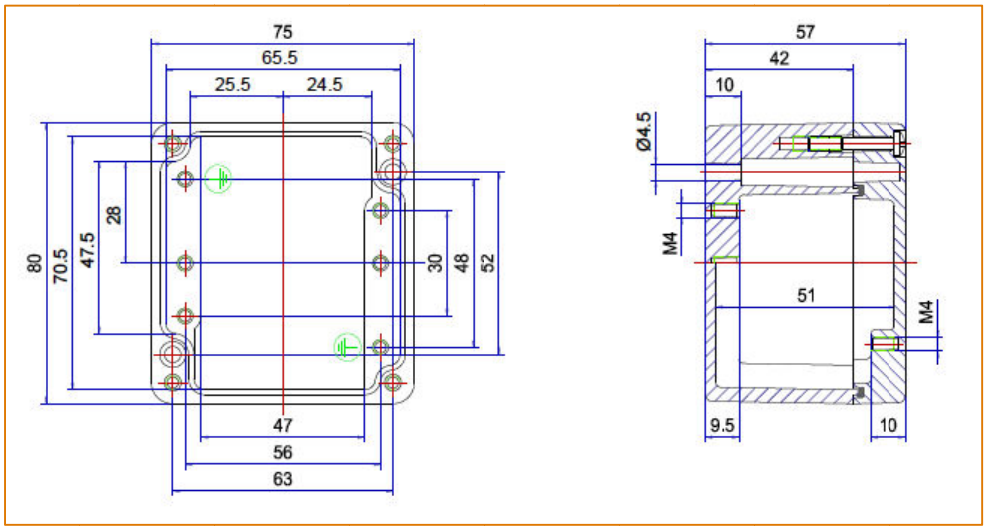

Figure 30: EMR dimensions and mounting holes

For surface mounting, use bolts that have thread diameter **no** greater than 4.5 mm and a head diameter **no** greater than 9.5 mm.

Important Drilling holes through the enclosure wall to mount the panel will **compromise** its IP rating and **void** the warranty.

For flush mounting, the maximum allowable wall thickness (with the enclosure still fitted) is 3mm as shown in **Figure 31.**

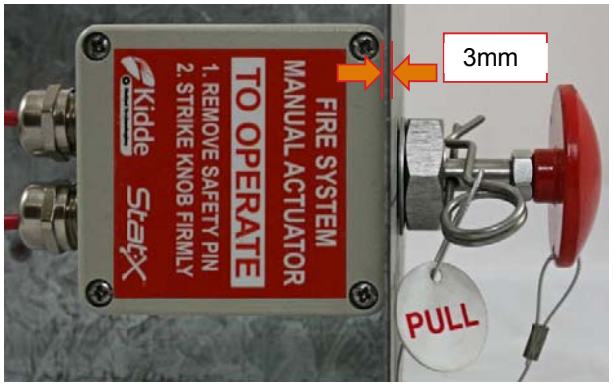

Figure 31: EMR flush mounted

It is not recommended to flush mount an EMR without the enclosure unless it is being installed in a cabin or another IP65 rated enclosure.

© 2018 Kidde Australia Pty Ltd

Multiple external manual releases

The EMR that is not being used as the last device in the detection circuit will require Switch 1 to be in the off position as detailed below in **Figure 32**.

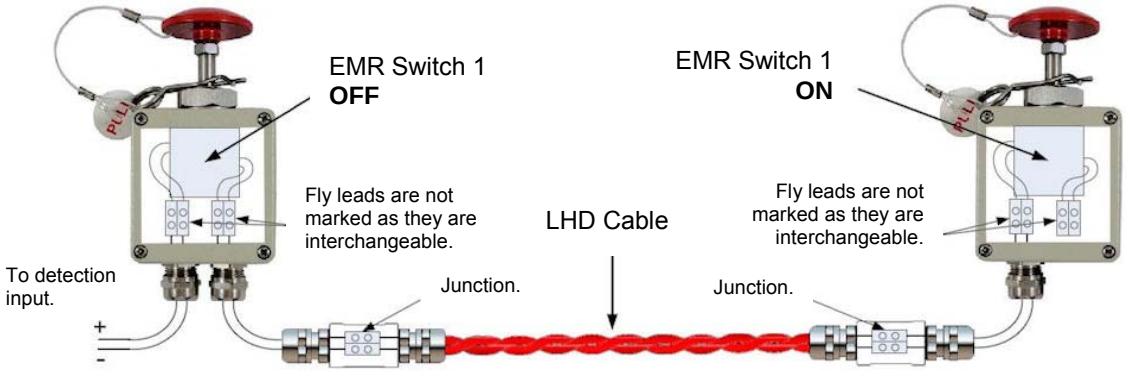

Figure 32: Example of a detection circuit with EMRs installed

Installing a discharge confirmation switch

A 'discharge' switch is used to confirm that the agent has been released from the fire suppression system. For Stat-**X**® systems, a thermal switch is used to provide this discharge confirmation.

Other types pre-engineered fire suppression systems typically utilise a pressure switch for discharge confirmation.

For details of how to install a thermal switch on Stat-**X**® generators, refer to the *Design, install, commission and maintenance manual for Aerosol fire suppression systems*.

Connect the discharge confirmation switch to pins **11** and **12** of the LV panel 12-way connector using fire rated cable.

Installing Stat-X® aerosol generators

A maximum of **5** x Stat-**X**® generators can be installed in the LV panel discharge circuit:

- Stat-**X**® generators **must** be connected in **series** and the **maximum** permissible total resistance of the discharge circuit is **11 ohms**.
- For a system using **5** x Stat-**X**® generators, the **maximum** total conductor length in the discharge circuit is limited to approximately **40 metres**.
- Connect the Stat-**X**® generators to pins **7** and **8** of the LV panel 12-way connector using fire-rated cable.

Refer to the *Design, install, commission and maintenance manual for Stat-**X**® fire suppression systems for vehicle and marine applications* for additional information about installing Stat-**X**® aerosol generators.

© 2018 Kidde Australia Pty Ltd

Engine shutdown relay

The shutdown relay in the LV panel is suitable for switching up to 2 amps. If **more** than 2 amp switching current capacity is required for the shutdown circuit, an external shutdown relay module **must** be installed.

Installing an external engine shutdown relay

Pins **1**, **2** and **3** of the LV panel 12-way series connector are field selectable contacts for N/O or N/C operation. See **Figure 14** on page **25**.

Figure 33 shows an example of a wiring diagram for a standard automotive relay.

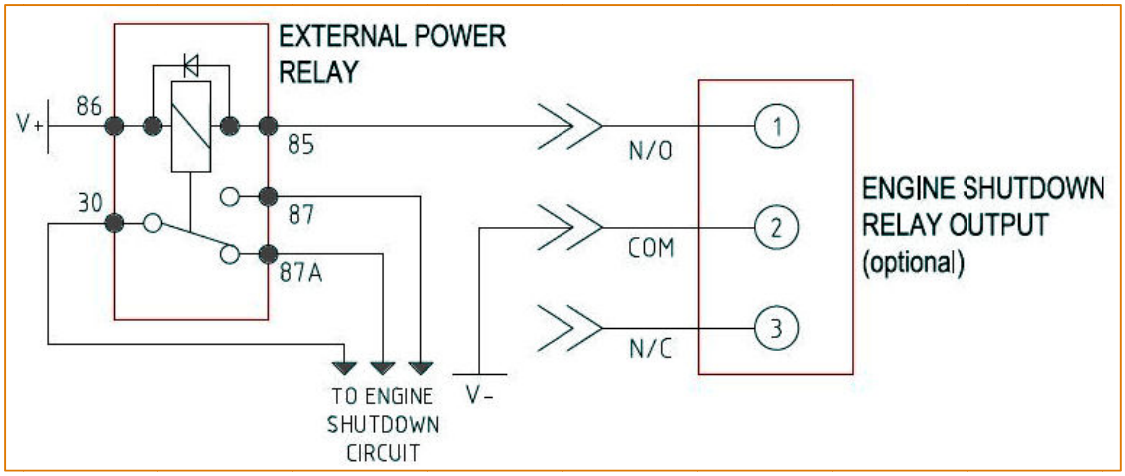

Figure 33: Wiring example for external shutdown relay

Auxiliary output

- The **auxiliary output** is suitable for switching up to 2 amps to operate an external siren or strobe or to interface with other systems, as required.
- Pins **4**, **5** and **6** of the LV panel 12-way series connector are field selectable contacts for N/O or N/C operation.
- The default configuration for the **auxiliary output** is for it to operate only for **ALARM** events:
  - The **auxiliary output** can be configured to operate on different system events.
  - Adjusting the operating mode of the **auxiliary output** requires the use of a computer connected to the RS 232 serial port of the LV panel.

    Refer to **Terminal interface** on page **42** for further information.

© 2018 Kidde Australia Pty Ltd

Anti-tamper seal

Fastern the anti-tamper seal to the **FIRE SYSTEM DISCHARGE** switch cover (missile switch cover) once installation and commissioning of the system has been completed.

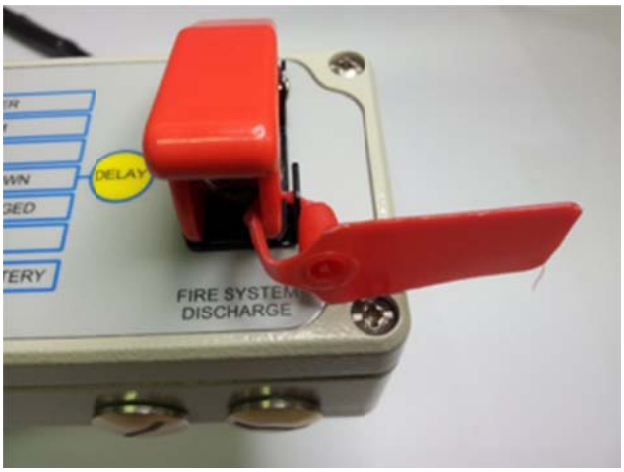

Figure 34: Fitting anti-tamper seal

Hybrid Operating Mode

Hybrid operating mode is available for LV panel with Firmware V1.0-3.

The objective of HYBRID operating mode is to give the operator full control (MANUAL mode) over the system discharge and the engine shutdown functions when present, while still able to provide full protection in the absence of the operator (AUTO mode). The absence/presence of the operator is determined by indirectly monitoring a supply rail that is switched through the equipment key switch.

When hybrid mode is enabled, the system switches automatically between the MANUAL and AUTO discharge modes based on the status of the EXTERNAL POWER input.

In a typical HYBRID installation, the Primary Power input is wired directly to the battery and the External Backup Power input is wired through the equipment ignition key switch as shown in the below.

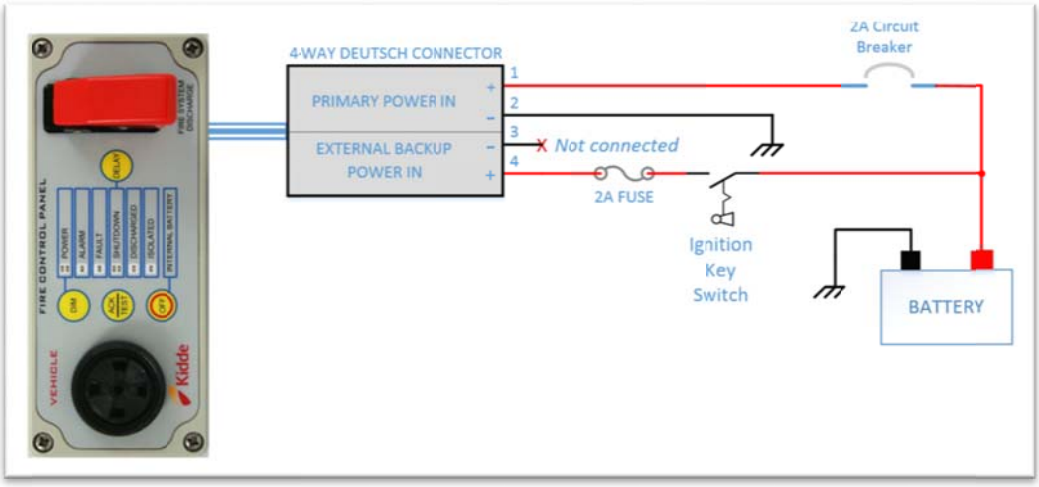

© 2018 Kidde Australia Pty Ltd

In HYBRID mode, the active operating mode is indicated by the POWER LED. When operating in HYBRID-AUTO mode the POWER LED will flash once a second and when operating in HYBRID-MANUAL mode the POWER LED will be illuminated and steady.

Audible notification is also provided on mode change and is configurable. By default, the audible notification is set for 4 seconds when the LV Panel changes from MANUAL to AUTO or from AUTO to MANUAL. Table below details new configurable items associated with the Hybrid operating mode

Key Switch Position	Operator	System Operating Mode	Visual Indication (POWER LED)	Description
OFF	Absent	AUTO	Flashing (1Hz)	On fire alarm, the system automatically shuts down the engine (if configured) and energises the actuation output.
ON	Present	Manual	Steady	The operator is required to operate the FIRE SYSTEM DISCHARGE switch to shut down the engine and energises the actuation output.

© 2018 Kidde Australia Pty Ltd

Panel configuration settings

This section contains information about:

— **Configuration settings using DIP switches**, see page **39.**
— **Terminal interface,** see page **42.**

© 2018 Kidde Australia Pty Ltd

Configuration settings using DIP switches

The following configuration settings can be changed using DIP switches located inside the panel on the LV panel PCB:

- Engine shutdown delay
- Discharge delay
- Auto or manual discharge
- System Isolate

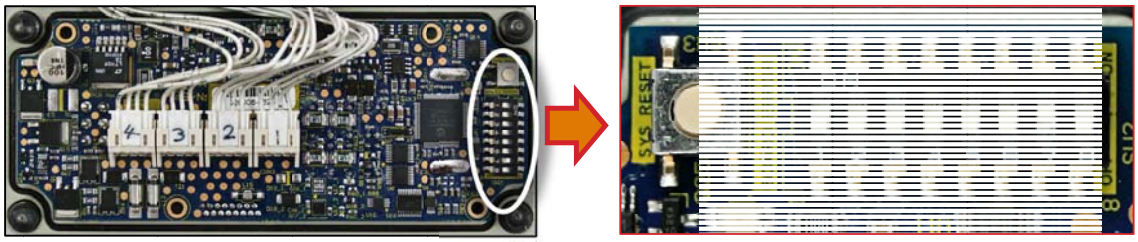

Figure 35: DIP switches on LV panel PCB

A small bladed screwdriver should be used to change switch positions. Be careful not to apply excessive force to the switches

Engine shutdown delays

A configurable shutdown time delay is incorporated into the LV panel to allow the vehicle or equipment operator to safely bring the equipment to rest **before** the shutdown is activated.

- The **default setting** for the shutdown time **initial delay** is **zero (0) seconds** (the time it takes for the shutdown relay to operate after a fire alarm).
- The **default setting** for the **delay extension** is the same as initial delay. If required, **delay extension** can be configured to have different delay time to the **initial delay** using terminal interface. Refer to **Terminal interface** on page **42** for further information.
- Shutdown delays are configured using DIP switches 1, 2 and 3. See **Table 9** on page **40.**

Eight (8) different shutdown delay times can be configured using the dipswitches. Delays periods should be kept as short as safely possible.

© 2018 Kidde Australia Pty Ltd

Time (seconds)	SW2 Switch Number		
	1	2	3
	Initial Delay = Delay Extension		
0 (default)	**OFF**	**OFF**	**OFF**
5	ON	OFF	OFF
10	OFF	ON	OFF
15	ON	ON	OFF
20	OFF	OFF	ON
30	ON	OFF	ON
40	OFF	ON	ON
60	ON	ON	ON

Table 9: Engine shutdown delay settings

Note After changing the engine shutdown delay setting using the DIP switches, a system reset is required to commit the change to the panel memory. See **System reset function**, on page **14**.

Discharge delays

Whilst the immediate discharge of a fire suppression system provides the best chance of suppressing a fire in its early stages, the air flow inside an engine compartment may dissipate Stat-**X**® aerosol, reducing its effectiveness.

A discharge delay timer is incorporated into the LV panel to allow a fire suppression system to discharge **after** a programmed time delay has elapsed. The discharge can also be linked with the engine shutdown delay so that **both** the shutdown and discharge outputs operate at the **same** time.

Discharge time delays are configured using DIP switches 4, 5 and 6. See Table 10 below.

Time (seconds)	SW2 Switch Number		
	4	5	6
0 (default)	**OFF**	**OFF**	**OFF**
5	ON	OFF	OFF
10	OFF	ON	OFF
15	ON	ON	OFF
20	OFF	OFF	ON
30	ON	OFF	ON
40	OFF	ON	ON
Link to ESDOP (coincide with engine shutdown output operation)	ON	ON	ON

Table 10: Discharge delay timer settings

Note After changing the discharge delay setting using the DIP switches, a system reset is required to commit the change to the panel memory. See **System reset function**, on page **14**.

© 2018 Kidde Australia Pty Ltd

Auto or manual system discharge

The discharge output can be configured for automatic **or** manual operation:

— **By default**, activation of the LHD cable or another detection device will automatically discharge the fire system. When configured for **manual operation**, the activation of the detection input will **only** initiate a **fire alarm**, and operate the auxiliary output (default configuration) and **engine shutdown** output.

— DIP switch 7 is used to configure automatic or manual operation. See **Table 11** below.

SW2 Switch Number	State	Function
7	**ON (default)**	**Automatic discharge**
	OFF	Manual discharge

Table 11: Automatic and manual discharge settings

Note After changing the discharge delay setting using the DIP switches, a system reset is required to commit the change to the panel memory. See **System reset function**, on page **14.**

— In manual discharge mode, operation of the LHD cable (or other detection device) prior to the operation of an EMR **will prevent** the EMR from discharging the suppression system. When configured for manual discharge, the only means to ensure the discharge of the suppression system is to operate the **FIRE SYSTEM DISCHARGE** switch on the LV panel.

System isolate

The system isolate switch:

— **Isolates** the discharge, auxiliary and shutdown outputs which allows for testing or maintenance without causing discharge of the system, initiation of equipment shutdown or operation of the auxiliary alarm output.

— Can also be used to override the engine shutdown output after it has been activated – See **Shutdown output reset,** on page **52.**

DIP switch 8 is used as the system isolate switch. See **Table 12** below.

SW2 Switch Number	State	Function
8	ON	System isolated
	OFF (default)	**System de-isolated**

Table 12: System isolate switch settings

© 2018 Kidde Australia Pty Ltd

Terminal interface

The LV panel is fitted with an RS 232 serial port to allow technicians to;

— customise the configuration settings

— view system information (such as, voltages, temperature and panel status).

— view and download logs (such as, event history and trend logs).

— view and set the real time clock (RTC).

— apply firmware updates.

Accessing these features requires a computer connected to the RS 232 serial port of the LV panel. The following items are required, as a minimum:

— Serial cable (Part # 255-982)

— Terminal software package V5, or later.

— A PC or laptop running Windows XP™, or later.

— A CommFront USB to RS 232 converter (only required if the PC or laptop, to be used, does **not** have an RS 232 serial port)

Important **Generic brands** of USB to RS 232 converters are **not** recommended due to **incompatibility** issues.

For full details on using the RS 232 serial port and completing advanced configuration, commissioning and maintenance tasks, please refer to the manual – *Terminal interface for LV and MV Panels*.

HYBRID operating mode

1. Engine Shutdown Facility

— Engine Shutdown Facility Enable/Disable Configuration

By default, the Engine Shutdown Facility is enabled. If not required, it can now be disabled via the system configuration. Disabling it will inhibit visual indications and switching of the output.

— Trigger Event in Manual Operating Mode

A new configurable option has been added to set the trigger event of engine shutdown output, selectable between “ANY ALARM” (Default) and “MANUAL DISCHARGE ALARM”. This setting applies to MANUAL or HYBRID-MANUAL operating modes only. In AUTO or HYBRID-AUTO operating modes, this setting doesn’t apply and the output will always switch on “ANY ALARM”.

Trigger Event Setting	Description
ANY ALARM	Backward compatible with previous versions of firmware. The first alarm in the system - regardless of the source - will initiate the engine shutdown sequence.
MANUAL DISCHARGE ALARM	Applies only to MANUAL & HYBRID-MANUAL modes. The engine shutdown sequence will start only on activation of the built-in Fire System Discharge switch.

© 2018 Kidde Australia Pty Ltd

— Enable / Disable Engine Shutdown in HYBRID-AUTO Mode

During the MANUAL phase, engine shutdown is always enabled unless the engine shutdown facility is disabled.

In HYBRID-AUTO mode, engine shutdown operation can be selectively enabled/disabled (default) during the AUTO phase of the HYBRID operating mode.

2. Disable of Manual Discharge Facility

— It is possible to disable the built-in FIRE SYSTEM DISCHARGE switch via the system configuration if required. By default, it is enabled.

© 2018 Kidde Australia Pty Ltd

Commissioning

This section contains information about:

— **Commissioning LV panels**, see page **45.**

© 2018 Kidde Australia Pty Ltd

Commissioning LV panels

LV panels can be installed as a stand-alone detection system but are more likely to be installed in conjunction with a fire suppression system.

Regardless of the configuration or complexity of the fire system, a **full** commissioning test must be completed **prior** to placing the system into service to ensure that the system is installed correctly, meets design specifications and is fully functional.

A commissioning checklist is used to confirm that:

- Installation requirements have been adhered to.
- System components have been correctly installed and tested.

Minimum commissioning checks

The minimum commissioning checks that need to be carried out on LV panels are:

Minimum Commissioning Checks	Details
1 **System configuration and signage**	System configuration as per design Signs and warning labels installed
2 **Real-time clock**	Set the **real-time clock** to current time and date Note Resetting the 'real-time' clock requires the use of a computer connected to the RS 232 serial port of the LV panel. Refer to **Terminal interface** on page **42** for further information.
3 **Electric detection, actuation and alarm systems**	Manual actuators provided at specified locations and easily accessible Linear heat detection (LHD) cable fitted and secured in fire hazard areas LV panel installed at operators location Field cabling installed and secured Equipment shutdown output connected
4 **Function tests**	LV panel function tested Audible and visual fire and fault alarms tested Time delay periods tested Discharge delay recorded Shutdown delay recorded Each detection device and manual actuator initiate alarms System discharge and equipment shutdown function tested Discharge circuit resistance checks completed
5 **Discharge switch anti-tamper seal**	Anti-tamper seal fitted to **FIRE SYSTEM DISCHARGE** switch

Table 13: Minimum commissioning checklist

It is recommended that a full capture of the LV panel system settings is downloaded as part of commissioning. Downloading the panel system settings requires the use of a computer connected to the RS 232 serial port of the LV panel. Refer to **Terminal interface** on page **42** for further information.

Note A detailed **Vehicle system commissioning checklist** is provided on page **64** and a **Vehicle system commissioning report** is provided on page **66.**

© 2018 Kidde Australia Pty Ltd

Maintenance

This section contains information about:

— **Routine service schedules,** see page **47.**
— **Replacing the internal battery,** see page **50.**
— **Reset procedures,** see page **52.**

© 2018 Kidde Australia Pty Ltd

Routine service schedules

Vehicle fire protection systems should be maintained in accordance with *AS 5062*, *Fire protection of mobile and transportable equipment*.

The routine service schedules for the LV panel are provided in this section, and set **minimum** requirements **only**.

In all cases, local conditions where the system is fitted should be taken into consideration when setting maintenance frequencies. For example, in harsh environments the yearly service may need to be carried out every six months.

Note For information on Stat-**X**® fire suppression system maintenance, refer to the *Design, install, commission and maintenance manual for Stat-X® fire suppression system for vehicle and marine applications.*

Daily schedule

Daily inspection items should be completed by the operator prior to equipment start-up **or** at a change of shift.

Daily schedule		
Item		**Actions Required and Pass/Fail Requirement**
1	Manual actuators	**a)** Check all release anti-tamper seals and pull pins are secure and in place. **b)** Check all actuators are secure, clean, undamaged and accessible.
2	LV panel	**a)** Check that all indicators show normal condition: ▪ Inspect the display panel and confirm that **only** the **green** **POWER** indication is illuminated. 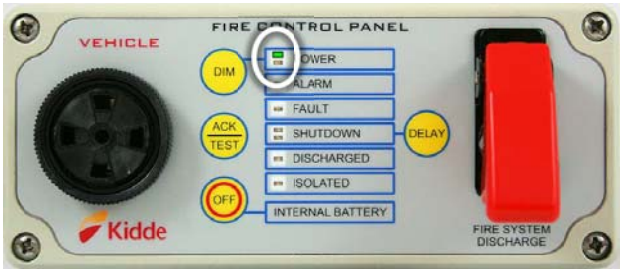 **b)** Press **and** hold the **DIM** button and confirm that: ▪ All indications illuminate. ▪ Audible **Buzzer** alarm sounds. 

© 2018 Kidde Australia Pty Ltd

Daily schedule		
Item		**Actions Required and Pass/Fail Requirement**
		▪ **Release** the **ACK | TEST** button and confirm that **only** the **green POWER** indication is illuminated. **c)** Check that panel is secure, clean, undamaged and accessible.

Table 14: Daily schedule

Six-monthly schedule

The six-monthly schedule **must** be completed by a competent service technician.

Complete the **daily** schedule, and then the **six-monthly** schedule:

Six-monthly schedule		
Item		**Actions Required and Pass/Fail Requirement**
1	Manual actuators	**a)** Test operation. **b)** Check anti-tamper seals are in place.
2	LV panel	Check internal battery voltage. Replace battery if less than 8 Volts.
3	Discharge circuit	Check wiring, connections and supports are intact, not damaged.
4	Detection system	Check detectors, wiring, connections and supports are intact, not damaged and detectors are in position.
5	Labels	Check manual release, system warning and instruction labels are securely in place, visible and legible.

Table 15: Six-monthly schedule

© 2018 Kidde Australia Pty Ltd

Yearly schedule

The yearly schedule **must** be completed by a competent service technician.

Complete the **daily** and **six-monthly** schedules, and then the **yearly** schedule:

Yearly requirements		
Item		**Actions Required and Pass/Fail Requirement**
1	Discharge circuit	**a)** Check discharge circuit resistance is **less** than the **maximum** allowed: **11 ohm**. For Stat-**X**® systems: i. Measure the resistance of the discharge cabling in the circuit, with the Stat-**X**® **generators disconnected**, and the ends of the wires at each generator location **connected together**. ii. Measure the resistance of **each** Stat-**X**® generator. Note The electrical resistance reading for **each** Stat-X® generator should be between 1.4 and 2.0 ohm. iii. Connect **all** Stat-**X**® generators in the circuit and measure the **total resistance** of the circuit (cabling and Stat-**X**® generators). Note The resistance measured in (**iii**) should **equal** the sum of the resistances measured in (**i**) and (**ii**). If they do **not** match **check** the discharge circuit wiring for faults. **b)** Function test the discharge circuit.
2	Detection system	**a)** Function test all detectors and detection circuits. **b)** Check detector coverage. **c)** Check for the presence of unprotected hazard areas, particularly where a source of fuel and heat exists. **d)** Check that the detector response is not adversely affected by, such things as: enclosure openings, ventilation airflows or high temperature protected areas.
3	System interface and shutdown	**a)** Test equipment shutdowns and record shutdown delay time. **b)** Test operation of **DELAY** push button and record delay extension time.
4	Environmental conditions	Check that the fire system and its components are suitable for the environmental conditions in which the machine is operating.

Table 16: Yearly schedule

© 2018 Kidde Australia Pty Ltd

Replacing the internal battery

The LV panel incorporates a field replaceable, non-rechargeable 9 V 1.2 Ah lithium battery. The battery should be replaced when an 'internal battery capacity low' fault is indicated. See **Fault diagnostics**, on page **57.**

The battery can be replaced with **or** without primary power connected; however, it is recommended that the battery be replaced with the primary power **disconnected** to prevent the possibility of damaging the PCB:

— This will, however, result in loss of the panels RTC settings.

— On power up, the RTC will be reset to the default time and date.

— The RTC will need to be set to the **current** time and date using a computer connected to the RS 232 serial port of the LV panel.

Replacing the battery without primary power connected

To replace a low-level battery, **without** the primary power supply **connected**, complete the following procedure:

1 Remove the front of the LV panel enclosure by unscrewing the 4 screws.

2 Loosen both cable entry glands to release the tension on the cables and allow the cover to open easily.

3 Remove the old battery from the rear of the enclosure.



Figure 36: Removing the old battery

4 Insert and connect a **new** battery (Part No. 020-044).

Note General purpose 9V batteries do not have the same capacity as high capacity lithium batteries and are not recommended for use.

5 Restore the primary power supply.

6 Wait for the panel to power up – both the **green** **POWER** and **amber** **FAULT** LED indicators should illuminate.

7 Press and hold both the **DELAY** and **OFF** buttons for **3 seconds** to clear the battery latching fault.

8 Reset the 'real-time' clock using the RS 232 connection.

Note Resetting the 'real-time' clock requires the use of a computer connected to the RS 232 serial port of the LV panel. Refer to **Terminal interface** on page **42** for further information.

© 2018 Kidde Australia Pty Ltd

Replacing the battery with primary power connected

To **retain** the panels RTC settings, the internal battery can be replaced **with** the primary power connected. However, if this procedure is not completed carefully, damage to the hardware may result. For this reason, this procedure should **only** be followed if a computer is **not** available to **reset** the LV panel RTC via the RS 232 connection.

To replace the battery, **with** the primary power supply **connected**, complete the following procedure:

1. Remove the front of the LV panel enclosure be unscrewing the 4 screws.
2. Loosen both cable entry glands to release the tension on the cables and allow the cover to open easily.
3. Remove the old 9 V battery from the rear of the enclosure.
4. Wait **10 seconds** for 'battery disconnected fault' to be asserted. See **Fault diagnostics**, on page **57**.
5. Insert and connect a **new** high-capacity lithium 9 V, 1.2 Ah battery.
6. Wait **10 seconds**.

After the LV panel detects a new battery voltage level **greater** than 9 volts (DC), the panel will return to its normal state.

© 2018 Kidde Australia Pty Ltd

Reset procedures

There are four **different** types of reset for the LV panel.

Type of reset	Description
System reset	Used to reset the panel following a latching **FAULT** or **ALARM** condition. A **system reset** is achieved by pushing the **DIM** and **ACK | TEST** buttons at the same time for at least **2 seconds**. **Alternatively**, a system reset can also be achieved using the system reset push button on the LV panel PCB: – Labelled **SW3** (**SYS_RESET**). – Located next to DIP switch **1** on the PCB. 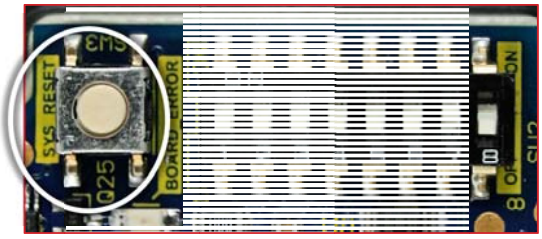 If following a **system reset**, the **FAULT** LED is still illuminated determine the type of fault by using the information contained in section **Troubleshooting LV panels** on page **54**. – Rectify the fault as appropriate. – Perform *another* **system reset**.
Shutdown output reset	Used to reset the shutdown output. To reset the shutdown output (for example, to allow a vehicle to be restarted following a shutdown/discharge sequence without resetting the alarm), complete the following procedure: **1** Remove the front of the LV panel enclosure by unscrewing the 4 screws. **2** Switch the **SYSTEM ISOLATE** switch (DIP switch **8**) to **ON** position.  **3** Wait for **ISOLATED** indicator to illuminate on the LV panel. 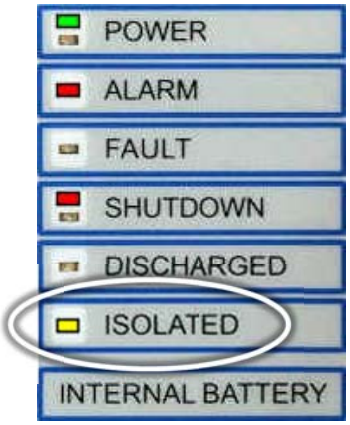

© 2018 Kidde Australia Pty Ltd

Type of reset	Description
	4 To return the system to the previous state, switch the **SYSTEM ISOLATE** switch (DIP switch **8**) to **OFF** position. **5** Confirm that the **ISOLATED** indicator is turned **OFF** (**SHUTDOWN** red LED will remain lit).
Post discharge reset	A post discharge fault is indicated when both the **FAULT** and **DISCHARGED** LEDs are illuminated following a system reset. See **Visual and audible indications on** page **11**. **Important** A **post discharge reset** *must* **only** be undertaken after confirming the fire suppression system has been returned to operational condition, i.e. Stat-**X**® generators replaced. To complete a **post discharge reset**: **1** Make sure that the system is **not** isolated. **2** Press and hold the **OFF** button. **3** Press and hold the **DIM** and **ACK | TEST** buttons. **4** Wait for the **DISCHARGED** indicator to turn off. **5** Release the **DIM** and **ACK | TEST** buttons. **6** Release the **OFF** button. **Note** A **post discharge fault** can also be cleared using a computer connected to the RS 232 serial port of the LV panel. Refer to **Terminal interface** on page **42** for further information.
Factory reset	Used to reset the panel configuration to the factory default settings. To **reset** the panel configuration to the factory default settings: **1** Isolate the system (by moving System Isolate Switch (DIP switch **8**) to **ON** position.  **2** Confirm that **ISOLATED** indicator is illuminated. **3** Press and hold the **OFF** button. **4** Press and hold the **ACK | TEST** button. **5** Continue to hold **both** buttons for **3 seconds**. **6** Release the **ACK | TEST** button. **7** Release the **OFF** button. **8** Reset the system, to apply the configuration changes, by pressing the **DIM** and **ACK | TEST** buttons, at the same time, and **hold both** for at least **2 seconds**. **9** Allow 10 seconds for the system to restart and initialised. **10** Confirm that the panel is **not** in the **ALARM** state **before** proceeding to the next step. **11** De-isolate the system by switching System Isolate Switch (DIP switch **8**) to **OFF** position.

© 2018 Kidde Australia Pty Ltd

Troubleshooting LV panels

This section contains information about:

— **LV panel firmware,** see page **55.**
— **Fault indications,** see page **56.**
— **Fault diagnostics,** see page **57.**
— **Hardware and firmware faults,** see page **61.**

© 2018 Kidde Australia Pty Ltd

LV panel firmware

Operation of the LV Panel is controlled by firmware. As new firmware versions of released, the firmware on already installed panels can be updated to the latest version using the RS 232 connection on the PCB of LV panels. Refer to **Terminal interface** on page **42** for further information.

When undertaking troubleshooting, it is important to find out *which* **version** of firmware is installed. To identify the firmware **version** installed on an LV panel:

1 Press and hold the **OFF** and **DIM** buttons.

2 Take note of which LEDs are illuminated on the panel display and compare these to the table in **Table 17**: to determine which firmware version is installed.

Firmware Version No.	Power (green)	Power (amber)	Alarm (red)	Fault (amber)	Shutdown (red)	Shutdown (amber)	Discharged (red)	Isolated (amber)
1.0-**0**	**ON**	OFF	OFF	OFF	OFF	OFF	OFF	OFF
1.0-**1**	**ON**	OFF	OFF	OFF	**ON**	OFF	OFF	OFF
1.0-**2**	**ON**	OFF	OFF	OFF	OFF	**ON**	OFF	OFF
1.0-**3**	**ON**	OFF	OFF	OFF	**ON**	**ON**	OFF	OFF
1.0-**4**	**ON**	OFF	OFF	OFF	OFF	OFF	**ON**	OFF
1.0-**5**	**ON**	OFF	OFF	OFF	**ON**	OFF	**ON**	OFF
1.0-**6**	**ON**	OFF	OFF	OFF	OFF	**ON**	**ON**	OFF

Table 17: Firmware version identification using LED indications

3 Write down the firmware **version** number. This information will be helpful when seeking technical support.

© 2018 Kidde Australia Pty Ltd

Fault indications

Failure of a fire alarm panel to function properly will likely be caused by one or more of the following conditions:

1. Failure of the power supply.
2. Incorrect installation.
3. Damaged wiring or corrosion.
4. Component failure.

When a failure occurs and the cause is not known, **check** as many of these items as is practical **before** starting a detailed, thorough troubleshooting process. For example, you should **firstly** check the following:

— If possible, obtain information about **any changes** that may have affected the system.

— Complete a visual inspection of the system.

Some faults, such as burned out relay tracks or wiring can be located by sight or smell. Look for loose connections. Check for smoke or the odour of burned or overheated parts.

Note Visual inspections **alone** can often discover a fault **before** the need to undertake complex troubleshooting activities. Visual inspections can also **avoid** damage to the system that might occur through **improper** servicing methods.

— Many faults on the system can be caused by problems related to the power supply.

— Check battery voltages **before** troubleshooting the system.

© 2018 Kidde Australia Pty Ltd

Fault diagnostics

A service technician must have a good understanding of the functionality of system **before** attempting corrective maintenance. **Before** attempting to diagnose and repair a fault, it is recommended that you read the entire *Light vehicle (LV) fire control panel, Installation and maintenance manual*.

When the LV panel detects an abnormal condition or a fault which may impair the operation of the system, audible and visual fault indications are generated:

- **Illumination** of the **FAULT** LED.
- **Sounding** of the panel **Buzzer** once every 10 seconds.

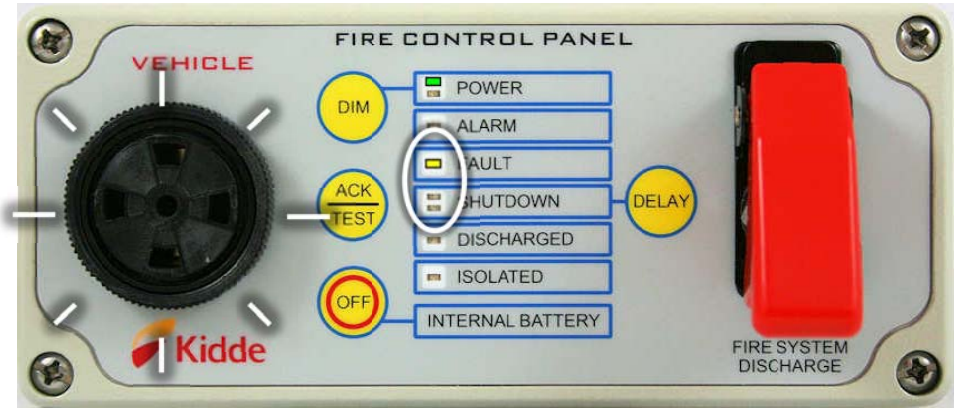

Figure 37: Light vehicle (LV) panel – fault indication

Primary power fault

If the **green** **POWER** LED is not illuminated, the LV panel has lost primary power. After the loss of primary power, the panel will continue to operate using its internal backup battery; however, the panel will enter into **power conservation mode** to preserve the life of the battery. See **Power conservation mode**, on page **16.**

To confirm the presence of a primary power fault, press any button and the **amber** **POWER** LED and **amber** **FAULT** LED should illuminate simultaneously.

© 2018 Kidde Australia Pty Ltd

Other faults

To diagnose other fault conditions, press and hold **DIM** button:



Figure 38: Using the DIM button to diagnose faults

- Single and multiple fault conditions can be diagnosed by observing which LEDs are illuminated and **comparing** them to **Table 19** on page **60.**
- When using the fault diagnostics function, take note as to whether the **green POWER** LED is illuminated for each fault condition.
- The **status** (**OFF** or **ON**) of the **green POWER** LED determines which column in the fault table should be used to determine the type of fault. See **Example – Using the fault diagnostic function** on page **59** for information on interpreting fault conditions.
- Multiple fault indications will cycle at 2 second intervals between those indicated with green POWER LED “on” or “off

Note Each fault condition is assigned a LED. Multiple LEDS can be lit if more than one fault condition exists.

© 2018 Kidde Australia Pty Ltd

Example – Using the fault diagnostic function

The table below illustrates the importance of the Green **POWER** LED when using the fault diagnostic function.

Green POWER LED – OFF	Green POWER LED – ON
	
Fault condition	**Fault condition**
ALARM (**red**) fault: – Internal battery disconnected Corrective action: – Reconnect internal battery	**ALARM** (**red**) fault: – System configuration fault Corrective action: – Contact Kidde for technical support
DISCHARGED (**red**) fault: – Detection input – open circuit Corrective action: – Check detection circuit wiring	**ISOLATED** (**amber**) fault: – Discharge output ground (–ve) shorted to chassis Corrective action: – Check discharge circuit wiring

Table 18: Example of interpreting faults using fault diagnostic function

Note Faults can also be identified and history logs **displayed** using the panel's RS 232 connection. This requires a computer connected to the RS 232 serial port of the LV panel. Refer to **Terminal interface** on page **42** for further information.

In some circumstances, a **hardware** or **firmware** fault may exist. These fault conditions **cannot** be ascertained using the fault diagnostic table above. See **Hardware and firmware faults,** page **61.**

© 2018 Kidde Australia Pty Ltd

Fault diagnostic table

Illuminated LEDs		Green POWER LED Status	
		Green POWER LED – OFF	**Green POWER LED – ON**
1	**POWER** (Amber)	**I/O PSU hardware fault** Corrective action: – Replace panel	**Post discharge fault (latching)** Corrective action: – Replace Stat-**X**® generators (if necessary) or refill suppression system and perform a **post discharge reset**
2	**ALARM** (Red)	**Internal battery disconnected** Corrective action: – Reconnect internal battery	**System configuration fault** Corrective action: – Contact Kidde for technical support
3	**FAULT** (Amber)	**Internal battery capacity low** Corrective action: – Replace internal battery	**System reset required** Corrective action: – Perform a **system reset**
4	**SHUTDOWN** (Red)	**Discharge confirmation input ground shorted to chassis** Corrective action: – Check discharge confirmation input wiring	**Discharge confirmation input activated (latching)** Corrective action: – Check discharge confirmation switch and wiring. – Once the fault has been rectified, perform a **system reset**
5	**SHUTDOWN** (Amber)	**Detection input ground shorted to chassis** Corrective action: – Check detection circuit wiring	**Failed production test** Corrective action: – Replace panel
6	**DISCHARGED** (Red)	**Detection input – open circuit** Corrective action: – Check detection circuit wiring	Discharge output PSU fault Corrective action: – Replace panel
7	**ISOLATED** (Amber)	Discharge output – open circuit Corrective action: – Check discharge circuit wiring	Discharge output (–ve) ground short to chassis Corrective action: – Check discharge circuit wiring
8	**No LEDs illuminated**	Panel has no power Corrective action: – Check power supply, fuses, connections and equipment power isolation switches	Panel has no power Corrective action: – Check power supply, fuses, connections and equipment power isolation switches

Table 19: Fault diagnostics

© 2018 Kidde Australia Pty Ltd

Hardware and firmware faults

A hardware or firmware fault is indicated by intermittent or continuous operation of the panel buzzer.

If no other condition can be found to cause the buzzer to operate, remove LV panel cover from the enclosure and check for the **Board Error** LED indication **LD2** located next to the DIP switch 1 on the PCB.

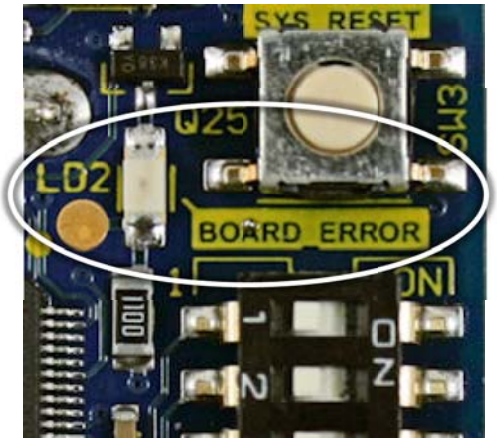

Figure 39: PCB Board Error indication

If the **Board Error** LED is illuminated, a hardware or firmware fault exists as detailed in the following table.

Board Error Indication	Alarm Buzzer	System State	Corrective Actions
On (**flashing**)	On (**intermittent**)	Unrecoverable **hardware** fault	Replace the board
On (**permanent**)	On (**permanent**)	**Firmware** is corrupted or not loaded	Call technical support

Table 20: Board Error indications

Note When powering up the LV panel, it is normal for the **Board Error** indication to **initially** turn on for approximately **2 seconds**. If **Board Error** indication stays on for **longer** than 2 seconds, a hardware or firmware fault exists.

© 2018 Kidde Australia Pty Ltd

Appendices

This section contains information about:

— **Wiring diagram,** see page **63.**
— **Vehicle system commissioning checklist,** see page **64.**
— **Vehicle system commissioning report,** see page **66.**
— **Service report,** see page **68.**
— **Feedback form,** see page **70.**

© 2018 Kidde Australia Pty Ltd

Wiring diagram

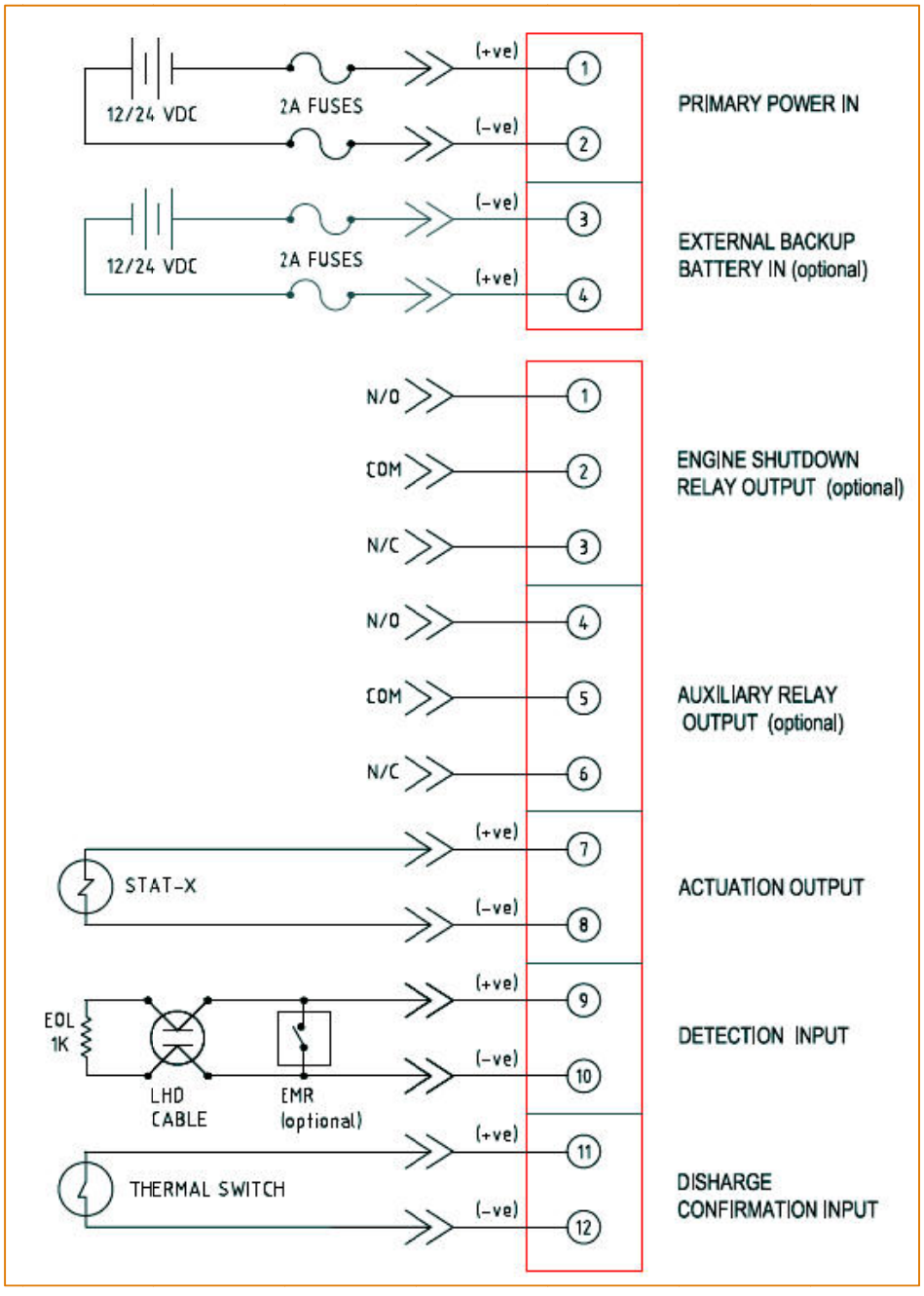

Figure 40: LV panel wiring diagram

© 2018 Kidde Australia Pty Ltd

Vehicle system commissioning checklist

Kidde	**Commissioning checklist for Stat-X® vehicle system installations using an LV panel**	Stat-X

Customer	
Vehicle make	
Vehicle model	

Item	Commissioning Item	✓ - Pass ✘ - Fail N/A	Comments
1	**System configuration as per design**		
2	**Warning signs or labels installed at access points to protected compartment**		
3	**Owner's manual supplied**		
4	**Stat-X® generators**:		
	a) Correct number of, size and type of generators installed		
	b) Correctly oriented and unobstructed		
	c) Undamaged and securely bracketed		
	d) Discharge seal intact		
	e) Area coverage and maximum installation height limits observed		
	f) Discharge clearance distance limits observed		
	g) Date of manufacture recorded		
5	**Mechanical release components**:		
	h) Accessible		
	i) Operating instructions in place		
	j) Undamaged and securely bracketed		
	k) Function tested		
6	**Electrical detection, alarm and actuation components**:		
	a) Manual release easily accessible		
	b) Operating Instructions in place		
	c) Fire detectors installed and function tested		

© 2018 Kidde Australia Pty Ltd

Item	Commissioning Item	✓ - Pass ✘ - Fail N/A	Comments
	d) Fire alarms (audible and visual) installed and function tested		
	e) Discharge circuit function tested		
	f) Fire-rated cabling used within the protected compartment		
	g) Hybrid Operating Mode tested (if applicable)		
	h) Cabling securely fastened		
	i) Electrical resistance of discharge circuit: i. Measure the resistance of the discharge cabling in the circuit, with the Stat-**X**® **generators disconnected**, and the ends of the wires at each generator location **connected together**. Measure the resistance of **each** Stat-**X**® generator. **Note**: The electrical resistance reading for **each** Stat-**X**® generator should be between 1.4 and 2.0 ohm. ii. Connect **all** Stat-**X**® generators in the circuit and measure the **total resistance** of the circuit (cabling and Stat-**X**® generators). **Note**: The resistance measured in (**iii**) should **equal** the sum of the resistances measured in (**i**) and (**ii**). If they do **not** match **check** the discharge circuit wiring for faults iii. Check total discharge circuit resistance is **less** than **11 ohms**.		
	j) Control panel function tested and clear of faults		
	k) Discharge missile switch anti-tamper seal fitted		

Comments	
Checked by	
Signature	
Date	

© 2018 Kidde Australia Pty Ltd

Vehicle system commissioning report

Kidde	**Vehicle system commissioning report**	Stat-X®

Customer				
Vehicle make		**Vehicle model**		
Vehicle identification number or serial number		**Fire hazard locations being protected**		
Number of Stat-X® aerosol generators installed		**Stat-X® aerosol generator(s): date(s) of manufacture**		
Equipment shutdown delay period		**Discharge delay period**		
Stat-X® vehicle system installation commissioning checklist completed			☐ Yes	☐ No
Additional remarks				

Compartment Protected	**Net Enclosure Volume (m^3)**	**Stat-X® Aerosol Generators Fitted**		**Application Density (grams/m^3)**	**Method of Actuation (✓)**
		Number	**Model**		
					☐ Electrical ☐ Thermal ☐ Manual
					☐ Electrical ☐ Thermal ☐ Manual
					☐ Electrical ☐ Thermal ☐ Manual

© 2018 Kidde Australia Pty Ltd

	Vehicle system commissioning report	

☐	**Commissioning checks of the system have been completed (✓)** **Refer to Stat-X® vehicle system installation commissioning checklist for details**

Commissioned by	
Signature	
Date	

Customer acknowledgement
The customer acknowledges that: They have read and understood the risks as identified in the Fire Risk Assessment document which has been completed for this equipment. The Stat-**X**® vehicle fire suppression system will assist in fire risk reduction but will not prevent a fire occurring.

Customer	
Signature	
Date	

© 2018 Kidde Australia Pty Ltd

Service report

Kidde	**Service report**	Stat-X®

Work order no.		**Date**	

Customer name		**Contact name**	
Customer address			
Telephone no.		**Mobile no.**	
Email address.			

Equipment type		**Equipment make**	
Equipment model		**Equipment s/n**	
Equipment location			

Stat-X® system type	☐ Vehicle	☐ Marine	
Generator model(s)		**Number of generators**	
Date(s) of manufacture			

Service schedule

Servicing is to be conducted in **accordance** with the relevant Australian Standards and manufacturers' manuals

Item	Service	Daily	6 Mthly	Yearly	Comments	Pass /Fail	Defects
1	Manual actuators – Check						
2	Control panels – Check						
3	Manual actuators – Test						
4	Control panels –Test						
5	Labels – Check						
6	Stat-X® generators – Check						
7	Discharge circuit – Check						

© 2018 Kidde Australia Pty Ltd

Service schedule							
Servicing is to be conducted in **accordance** with the relevant Australian Standards and manufacturers' manuals							
Item	**Service**	**Daily**	**6 Mthly**	**Yearly**	**Comments**	**Pass /Fail**	**Defects**
8	Detection system – Check						
9	Stat-**X**® generators – Check date						
10	Discharge circuit – Check & function test						
11	Detection system – Check						
12	System interface – Function test						

Record of all repairs
Record of parts used
Does system meet original design specifications? ☐ Yes ☐ No
If No, detail changes

Name of technician		**Signature**	
Name of customer		**Signature**	
Date			

© 2018 Kidde Australia Pty Ltd

Feedback form

Your feedback …

We welcome your feedback regarding the **Light vehicle (LV) fire control panel installation and maintenance manual.**

If you have any recommendations for improvement to this manual, please provide details using this form.

Send the completed form to Kidde Australia Pty Ltd – email to kane.ng@kidde.com.au

About you …	
Name	
Organisation	
Organisation address	
Contact phone number	
Email address	

About this manual …						
Manual title	Light vehicle (LV) fire control panel installation and maintenance manual					
Version number	Version 2.0					
How do you rate this manual? (circle response)	Excellent	Good	Fair	Poor	Complete	Incomplete
What type of feedback do you want to leave? (✓)	☐ Problem	☐ Question	☐ Suggestion	☐ Comment		

Your recommended changes to this manual …					
Page no.	**Paragraph no.** (from top of page)	**Paragraph line no.**	**Figure no.**	**Column no.**	**Recommended change and your reason(s)**

Office use only			
Receive date	**Action(s) required**	**Priority**	**Comments**

© 2018 Kidde Australia Pty Ltd