PRODUCT BULLETIN

FSI V5 SERIES FOAM-GUARD FIRE ALARM PANEL

PURPOSE

FSI's V5 series Foam-Guard fire alarm panels have been designed to provide enhanced reliability monitoring for mobile plant fire systems and incorporate data capture technology and autonomous control mechanisms as part of an extensive range of new benefits and features.

Both the display and control units have undergone significant hardware and software upgrades to enable wireless programming and wireless real time system status monitoring facilitating on the move diagnostics where continued high performance is critical.

PRODUCT FEATURES

DISPLAY UNIT

- Redesigned fly lead and DT series connectors to enable simpler vehicle dash mounting
- Monitored display cable connection
- Self-annunciating to control module
- Additional circuit monitoring alerts
- Dual display capabilities
- Alerts for correct programming setup and display compatibility

CONTROL UNIT

- Redesigned PCB with wireless connectivity
- Li Ion battery backup function enabling 24/7 status and operational functionality without external power input
- Internal shutdown and auxiliary alarm relays for autonomous machine 'back to base' alerts
- Remote telemetry interface including remote system activation input
- Downloadable system event log via FSI AssetCONNECT iPad application
- Real time diagnostics
- Wireless programming
- Control unit supplied complete with prewired harness and DT series connectors
- Tamper proof IP rated enclosure

FUNCTIONALITY

The control unit is a factory sealed component (there are no user adjustable parameters available on the PCB) and has a selection of preconfigured Deutsch plug connections for main power, pressure monitoring and discharge, thermal detectors, solenoid valve operation, remote telemetry and manual activation for electric systems. Systems requiring remote activation will be fitted with an internal rechargeable battery that will provide sufficient power to control all required detection and suppression functions in accordance with AS5062-2016.

Like previous V3 and V4 display units the tactile keypad incorporates a seven-segment LED window which displays a range of alarm and fault codes and digital countdown for operator visualisation prior to shutdown signal output. A 3.3m connection cable between display and controller is also supplied in each V5 unit package.

The engine shutdown timer remains programmable from 0 to 30 seconds (in 5 second increments) and allows a maximum of three 10 second shutdown delays.

The delay function is activated by depressing the yellow 'SHUTDOWN EXTEND' button when the system is registering a 'FIRE ALARM'. After a maximum of three delay periods the function is isolated and the shutdown output signal will initiate upon countdown completion.

TECHNICAL DATA

The concentrate should be maintained within the recommended operational temperate range as shown below.

Internal Battery Charging Temperature	0-45°C
Control Unit Electrical	1 x 12 Pin Deutsch, 1 x 8 Pin Deutsch
Control Unit Enclosure Specification Connection	Polycarbonate IP67
Display Unit Enclosure Specification	Polycarbonate IP67
Display Unit Electrical Connection	4 Pin Deutsch
Display Unit Alarm	Piezo
Display Unit Label	Multilayered Polycarbonate
Display Unit Communication Cabling	ÖLFLEX CLASSIC 110 – Pre-terminated PVC 3.7 metre control cable

ELECTRICAL

The FSI V5 Control Panel will operate using both 12VDC or 24VDC depending on vehicle type. All control units come prewired with 4, 8 and 12 pin electrical looms and V5 panel packages will be supplied with relevant male and female connectors for machine and fire system integration.

As with previous versions the display units are connected to control modules using a preconfigured 4 core loom. This input loop is monitored and disconnection of the display unit or damage to the cabling during operation will enact a machine shutdown scenario.

Control modules will also automatically detect the presence of either indicator or shutdown type displays. Where an indicator display is required the shutdown countdown timer setting must be programmed to 'nA'. All V5 control modules are also capable of running two display units independently.

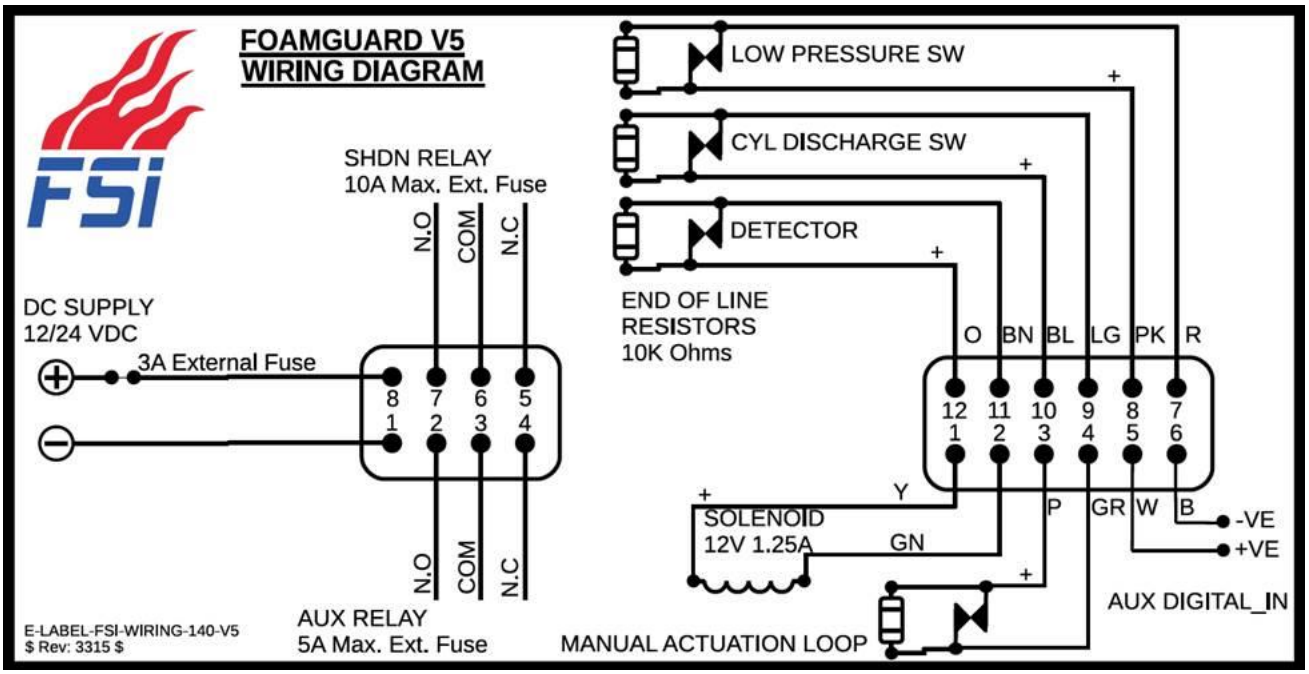

ELECTRICAL DATA

Backup Battery Service Life	24 months from installation
Internal Shutdown Control Relay	N.O, N.C, COM 10 Amp Max
External Aux Digital In (Remote Activation)	External 12/24VDC Input
Bluetooth (BT) LE Hardware	Rigardo BMD-300
Internal Battery Specification	7.2V (Nominal) 2.5Ah 18Wh Li ion
Power Requirement	10-28VDC 3A Fused
Solenoid	G1/8" 2 way NC 0-2.5MPa 7VDC 50Hz
Real Time Clock (RTC) Battery	Panasonic BR2032 3V

SYSTEM CONFIGURATION

FSI V5 Fire Alarm Panels are fully configurable via display unit keystrokes and each unit will require programming setup upon installation. V5 units may also be configured wirelessly using FSI's AssetCONNECT iPad application.

When a new panel initially receives a 12 or 24V power connection a 'U' will temporarily appear in the display window followed by the 'ISOLATED' and 'MAIN POWER ON' LED's illuminating. This indicates an unconfigured state. Once the unit is configured per the required fire system specification the internal microprocessor will retain this information. You will not be able to leave the configuration settings mode unless all system parameters have been successfully programmed.

When a configuration setting is entered or exited the piezo will beep. This confirms:

1) The user is in the parameter setting mode.
2) That the parameter is saved upon setting selection. The setting will automatically save after 7 seconds of standby.

The following points are key to note:

- All configuration parameters **must** be set for the Foam-Guard V5 Display Unit to enter the 'NORMAL' operation mode where alarms/faults are detected/reacted to.
- Configuration parameters are accessed from the 'ISOLATED' state only.
- Unconfigured parameters are visually identified by a '-' symbol on the 7-segment display.
- Parameters are saved automatically after 7 seconds of standby. The user is automatically returned to the 'ISOLATED' state where more parameters may be accessed.
- Wireless system configuration can also be undertaken using FSI's AssetCONNECT iPad application.

SYSTEM PARAMETER DESIGNATION

Number of Displays ('d' (unconfigured) -> '1d' (one display) -> '2d' (two displays). This menu is accessed by holding the 'DIM' button for > 7 seconds from within the isolated state. Pressing 'DIM' will cycle between the listed settings.

V5 Fire Panels may run a maximum of 2 independent display units. Dual display systems require two additional communication cables and a 'Y' adaptor and both display units should be installed prior to powering up the control unit. Loss of power (disconnection) to both displays during machine operation will enact the pre-configured engine shutdown protocol. If communication to only one display unit is lost, the shutdown time extension function will still be available on the functioning display unit.

Once reconnected the displays will self-reinstate. An 'Isolate/Reset' procedure will need to be conducted to clear the latching system fault codes.

Battery Installed ('b-' (unconfigured) -> b0 (backup battery disabled) -> 'b1' (backup battery enabled/fitted). This menu is accessed by holding the 'SYSTEM TEST' button for > 7 seconds from within the 'Isolated' state. Pressing 'SYSTEM TEST' will cycle between the listed settings.

System Type ('S-' (unconfigured) -> 'S0' (solenoid disabled) -> 'S1' (solenoid enabled). This menu is accessed by holding the 'SHUTDOWN EXTEND' and 'SYSTEM TEST' buttons simultaneously for > 7 seconds from within the "isolated" state. Pressing 'SHUTDOWN EXTEND' will cycle between the listed settings. If set to S1, the control unit will expect a solenoid to be connected and will fault and perform vehicle shutdown if not.

Note: When the control unit initiates solenoid operation the solenoid will remain energised for a period of 2 minutes. Solenoid operation is indicated in the seven-segment display window via "00". During this time the fire system will not allow the user to enter the "Isolated" state.

Monitoring Circuits ('P-' -> 'P1' -> 'P2' -> 'P3' -> 'P4' -> 'P5' -> 'P6'). This menu is accessed by holding the 'SYSTEM TEST' and 'DIM' buttons for > 7 seconds from within the 'isolated' state. Pressing 'SYSTEM TEST' will cycle between the listed settings. Details of each setting are listed below.

MONITORING CIRCUIT SETTINGS

	Detector Loop (FLD/Thermal Probes)	Cylinder Low Pressure Switch Loop	Cylinder Discharge Switch Loop	Manual Electric Actuation Loop
P-	Unconfigured	Unconfigured	Unconfigured	
P1	Disabled	Disabled	Enabled	Disabled
P2	Enabled	Disabled	Enabled	Disabled
P3	Disabled	Enabled	Enabled	Disabled
P4	Enabled	Enabled	Enabled	Disabled
P5	Disabled	Enabled	Enabled	Enabled
P6	Enabled	Enabled	Enabled	Enabled

Power off This is accessed by holding all 3 display unit buttons for 30 seconds from within the 'isolated' state whilst the vehicle's batteries are isolated. Release at any time before to cancel power off. In this state, the internal battery is disconnected electronically and put into sleep mode. It will automatically reconnect upon application of vehicle power (12/24V).

Shutdown Counter Setting This menu is accessed by holding the 'SHUTDOWN EXTEND' button for > 7 seconds from within the 'isolated' state. Pressing 'SHUTDOWN EXTEND' will cycle between the user adjustable settings. The following parameter options are available:

'—' (Unconfigured), 0 seconds – immediate shutdown, 10, 15, 20 25 and 30 seconds and nA.

The selected configuration will automatically save after 7 seconds of standby.

The system will allow the operator three 10 second extension periods that will not accumulate past the pre-determined shutdown time.

Note: 'nA' should be selected only when programming indicator panels. If 'nA' is selected when programming a shutdown controller, fault codes F4 and F9 will register in the 7-segment display window when the display is reset to the 'Normal' operational mode. When the correct display type is connected an 'Isolate/Reset' procedure should be undertaken to clear the latching fault codes.

BATTERY BACKUP FUNCTION

The Foam-Guard V5 Fire Panel will be routinely supplied with battery backup for electric detection and actuation systems and forms an optional extra for pneumatic system types (LOP or ROP). For pneumatic configurations the addition of battery backup functionality enables FSI thermal probes to detect and actuate and offers improved durability in high heat and exposed risk areas.

For electrical systems if 12/24V machine power is lost during operation, the control panel will initiate the pre-set vehicle shutdown timer and indicate a 'Power Fault' code. The operator will have access to 3 x 10 second vehicle shutdown extension times, before the shutdown relay is de-energised and the vehicle ignition signal is disrupted. The system will then revert to its standby monitoring state where 'NORMAL' and 'POWER FAULT' LED's will illuminate once every 60 seconds.

Note: The Foam-Guard V5 Fire Panel requires a minimum of 12.5V main power input to correctly charge the internal Lithium Ion backup battery.

The internal 7.2V Li Ion battery is a 2-yearly service replacement part where fitted.

ISOLATE FUNCTION

When the V5 Panel is placed in 'ISOLATE' mode all the input and solenoid loops are disabled. Short circuiting of any of the loops will not trigger an alarm state.

ALARM & FAULT CODES

ALARMS

When the Foam-Guard V5 Fire Panel enters an alarm condition the applicable codes will be displayed on the 7-segment display via depressing the 'SYSTEM TEST' button.

A0 - Detector Circuit Alarm (latching) - enacts shutdown relay

A1- Discharge Switch Alarm (latching) - enacts shutdown relay

A2 - Low Pressure Switch Alarm (latching) - enacts shutdown relay

A3 - Remote Trigger Alarm – Aux Digital In (latching) - enacts shutdown relay

AA – Manual Actuation Circuit Alarm (latching) - enacts shutdown relay

Note:
An alarm condition will override any pre-existing fault conditions

FAULTS

F0 - Detector Circuit Fault (latching) - enacts shutdown relay

F1 - Discharge Pressure Switch Circuit Fault (latching)

F2 - Low Pressure Switch Circuit Fault (latching)

F3 - Solenoid Circuit Fault (set when driven) (latching) - enacts shutdown relay

F4 - Display Fault (latching) - enacts shutdown relay

F5 - Internal Supply Fault (Loops)

F6 - Backup Battery Fault

F7 - Battery Charge Fault

F8 - RTC Battery Fault

F9 - General System Fault

FA - Manual Actuation Circuit Fault - enacts shutdown relay

NOTIFICATIONS

00 - Solenoid Energised

Note:

The V5 panel automatically tests circuit continuity every 4 seconds.

A 2-4 second delay may occur between fluid discharging into the fire system ring main and alarm and fault codes registering on the system display panel.

SYSTEM TEST

Under normal operational conditions momentarily depressing the 'SYSTEM TEST' button will cycle the V5 Panel through a system check of the loop circuits. Upon completion, provided no faults are detected, the display will return to the 'NORMAL' and 'MAIN POWER ON' condition when 12/24V mains power is supplied. In the post alarm state pressing the 'SYSTEM TEST' button will cycle through all latched faults and/or alarms on the 7-segment display.

AUX DIGITAL IN

For automated machinery the Aux Digital_In circuit (pins 5 and 6 on the 12-pin plug) should be used to activate the fire system remotely. This can be achieved using either a 12 or 24V remote controlled input across pins 5 & 6. Application of voltage will enact a system discharge solenoid response. For systems that require remote activation a solenoid must be installed and connected to pins 1 and 2 on the 12-pin plug. When activated the controller will apply power to the solenoid for 2 minutes. During this time the system cannot be put into the 'ISOLATE' mode.

SHUTDOWN RELAY CONFIGURATION

The Shutdown Relay should be configured as follows:

- For ignition or E-Stop circuits that are N.O. in the run condition use pins 5 (N.C.) and 6 (COM)
- For ignition or E-stop circuits that are N.C. in the run condition use pins 6 (COM) and 7 (N.O.)

As represented on the wiring schematic the relay is in the de-energised state and as such can be tested with a multimeter.

When 12/24V power is supplied to the V5 panel the relay becomes energised and the N.C. pin (5) will switch open and the N.O. pin (7) will switch closed.

The V5 controller internal shutdown relay is rated to 10 amps max. If machine ignition or E-stop circuits are known to have increased current draw above 10 amps under cranking or during normal operational conditions, it is recommended that an external 25-30 amp 12 or 24V relay (depending on machine supply voltage) is used. Under these circumstances the FSI V5 controller should supply an earth signal through the appropriately selected V5 shutdown relay terminals to the external relay.

SOLENOID WIRING

FSI solenoids used in V5 electrical actuation systems are supplied complete with fitted 2 core electrical harness:

Solenoid Hirschmann and DT series 2 pin plug configuration as follows:

Pin 1 (+ve), Pin 2 (-ve)

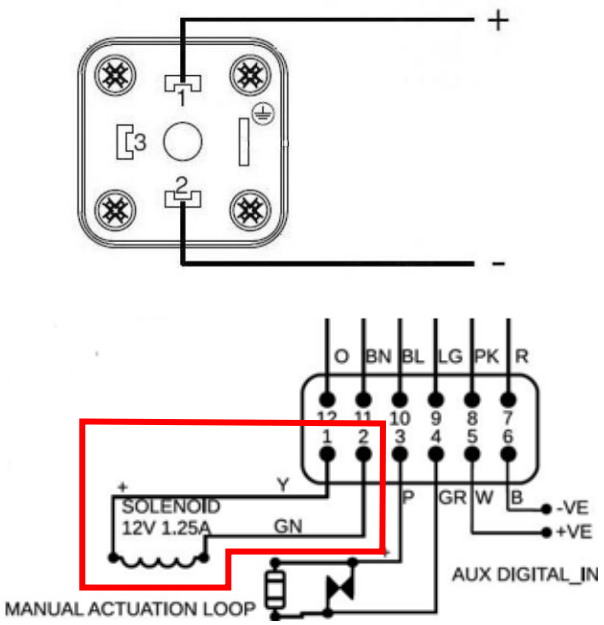

Solenoid cabling may be run directly to pins 1 and 2 on the V5 controller 12 pin harness or alternatively run into FSI's CPS Enclosure (P/N: FSI21105) included in electric activation vehicle system installation kits. See FSI Installation and Maintenance Manuals for further information

SERIAL NUMBER SEQUENCING

All V5 Panels will be supplied with an individual serial number located on the tamper proof seal.

The serial number format will be as follows: 19A001.

This sequence represents – manufacture year, fortnight (A-Z, 26 per year) and unit number produced in that fortnight.

AVAILABILITY

FSI V5 Fire Control Panels will be available to order from 1st December 2019.

PART NUMBERS

Please be advised of the following V5 part numbers for order referencing.

V5 Shutdown Panel Assembly	FSI 16017
V4/V5 Shutdown Display Module	FSI 16012
V5 Shutdown Panel Assembly Battery Backup	FSI 16018
Backup Battery Pack (suitable for V3, V4 and V5 electric detection and actuation systems)	FSI 16003
V5 Indicator Panel Assembly	FSI 16014
V5 Indicator Display Module	FSI 16015
V4/V5 Display Cable	FSI 16016

Note:

- V5 and V4 panels and displays are not compatible with V2 or V3 units.
- V4 panels and displays will function as normal when used in conjunction with V5 components.
- Bluetooth retrievable data logs via FSI's AssetCONNECT iPad app are only available for download where V5 panels are fitted.
- FSI AssetCONNECT may be used for real time diagnostics on both V4 and V5 panel types.

PACKAGE CONTENTS

When ordering either of FSI 16014 or FSI 16017 the following parts will be shipped:

- Display Unit
- Control Unit (with harnesses)
- 3.3m pre-terminated communication cable
- Required male connectors and sealing plugs
- Programming instructions

When ordering FSI 16018 – for all system types requiring electrical detection and/or actuation.

- Display Unit
- Control Unit (with harnesses)
- 3.3m pre-terminated communication cable
- Required male connectors and sealing plugs
- Internal backup battery module (factory fitted)
- Programming instructions

All Pricing Enquiries should be forwarded to:
PARTS@FIREANDSAFETY.COM.AU