Marine Vessel (MV) fire control panel











Installation and maintenance manual

© 2018 Kidde Australia Pty Ltd

About this manual

Kidde Australia Pty Ltd ("Kidde") assumes no responsibility for the application of any systems other than those addressed in this manual. The technical data contained herein is limited strictly for informational purposes only.

All information contained in this manual is based on the latest product information available at the time of preparation and Kidde reserves the right to make changes at any time without notice.

Kidde believes this data to be accurate, but it is published and presented without any guarantee or warranty. Kidde disclaims any liability for any use that may be made by the data and information contained herein by any party.

Important Systems **must only** be designed, installed, and commissioned by **technicians accredited** by Kidde.

No part of this manual may be reproduced, stored in a retrieval system, or transmitted in any form or by any means, electronic, mechanical, photocopying, or otherwise without the prior written approval of Kidde Australia Pty Ltd.

For further information, contact Kidde Australia Pty Ltd. ACN 006 252 428:

- Telephone on: **1800 672 171**
- Internet at: **www.kidde.com.au**
- Technical support portal: **www.kidde.zendesk.com**

StatX® is a registered trademark. Manufactured in the USA and sold worldwide exclusively by Fireaway LLC under licence from Techno-TM, LLC

Revision

Revision	Notes
1.0	Initial release
2.0	New template Updated and added new graphics and images Added "Typical system operation" flowchart Added more technical information in Table 1: Features and Specifications Added an "Example – Using the fault diagnostic function" Updates associated with Firmware V 1.0-2 Added Flashni wiring diagram Added Maintenance Report
2.1	Updated description for ALARM condition on page 11.
2.2	Added Maintenance Isolate via Keypad function

© 2018 Kidde Australia Pty Ltd

Contents

MV panel overview ---------- 5

Introduction ---------- 6
Immunity to electromagnetic interference ---------- 7
Features and specifications ---------- 7
Overview of MV panel operation ---------- 10
Visual and audible indications ---------- 10
User controls ---------- 13
Fire detection, control and alarm components ---------- 15

Installation guidelines ---------- 19

MV panels and power supply ---------- 20
Accessories ---------- 21
Changing the cable entry position ---------- 21
Pin connections ---------- 23
Wire gauge size ---------- 24
Installation of detection devices ---------- 25
Wiring multiple point detectors ---------- 26
End-of-line resistor ---------- 26
Installing a discharge confirmation switch ---------- 27
Installing Stat-X® aerosol generators ---------- 27
Installation of warning devices ---------- 28
Auxiliary output ---------- 28
Anti-Tamper Seal ---------- 29

Panel configuration settings ---------- 30

Configuration settings using DIP switches ---------- 31
Discharge confirmation enable ---------- 31
Pre-discharge delay ---------- 32
Auxiliary output operation ---------- 32
System isolate ---------- 33
Terminal interface ---------- 33

Commissioning ---------- 34

Commissioning MV panels ---------- 35
Minimum commissioning checks ---------- 35

© 2018 Kidde Australia Pty Ltd

Maintenance ---------- 37

Routine service schedules ---------- 38
Daily schedule ---------- 38
Monthly schedule ---------- 39
Six-monthly schedule ---------- 39
Yearly schedule ---------- 40
Reset procedures ---------- 40

Troubleshooting MV panels ---------- 42

MV panel firmware ---------- 43
Fault indications ---------- 43
Fault diagnostics ---------- 44
Example – Using the fault diagnostic function ---------- 46
Fault diagnostic table ---------- 47
Hardware and firmware faults ---------- 48

Appendices ---------- 49

Wiring diagram: MV panel ---------- 50
Wiring diagram: Flashni Sounders ---------- 51
Marine system commissioning checklist ---------- 52
Stat-X® marine system commissioning report ---------- 54
Service report ---------- 56
Feedback form ---------- 58

© 2018 Kidde Australia Pty Ltd

MV panel overview

This section contains information about:

— **Features and specifications,** see page **7.**
— **Overview of MV panel operation,** see page **10**.
— **Fire detection, control and alarm components,** see page **15**

© 2018 Kidde Australia Pty Ltd

Introduction

The marine vessel (MV) panel (Part No. 001-927) has been designed to meet the requirements of the *National Standard for Commercial Vessels (NSCV) part C design and construction, section 4 fire safety*. It has also been subjected to component testing as specified in Appendix D of AS 5062, *Fire protection of mobile and transportable equipment*.

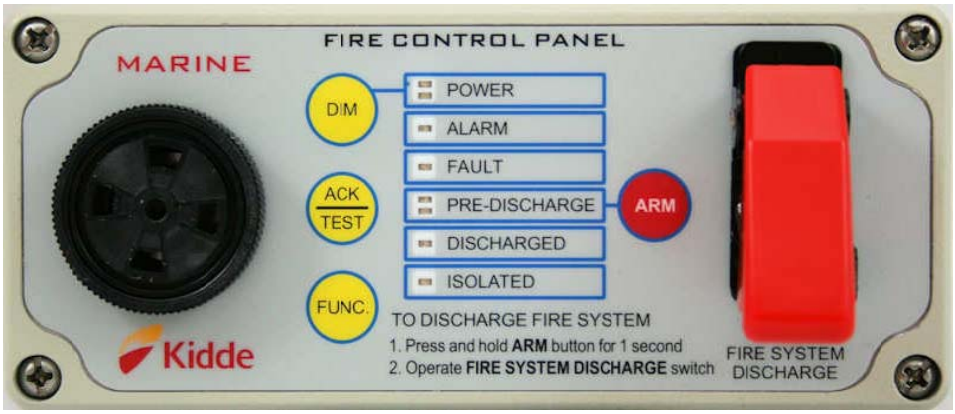

Figure 1: Marine vessel (MV) panel

It incorporates visual and audible alarms and manual controls in a single, weatherproof enclosure and is suitable for use in commercial vessels and private pleasure craft.

The MV panel:

- Supports automatic fire detection and alarm functionality.
- Incorporates a manual discharge switch (fire system discharge) to allow the manual operation of the fire suppression system.
- Display provides visual indications of system status.

Note Automatic discharge of fire suppression systems is **not** permitted on commercial vessels and the MV panel has been designed to comply with this requirement – the MV panel does **not** support automatic discharge of the suppression system.

It is **permissible for private vessels** to have a fully automatic fire detection and suppression system to provide protection to the vessel even when it is unmanned. In such cases, owners may want to use a **LV panel** instead of a MV panel to provide this functionality.

© 2018 Kidde Australia Pty Ltd

Immunity to electromagnetic interference

Most industrial environments produce high levels of electrical noise, so the MV panel has been compliance tested for immunity to electromagnetic interference against the requirements of Australian Standard AS 61000.6.2:2006, *Electromagnetic compatibility (EMC) – General standards – Immunity for industrial environments*.

To minimise the effects of electromagnetic emissions from high energy sources, the wiring for the MV panel should **not** be run in parallel, or in close proximity to any cables or equipment that may produce high levels of RF (radio frequency) energy. For example, cabling for RF transceiver antennas, inverters, motors etc.

Features and specifications

The table below lists the features and specifications of MV panels.

Marine Vessel Panel Features and Specifications		
Feature	**Description**	
Electrical Field Connections	IP65-rated Deutsch DT series connectors.	
Enclosure	IP65-rated metal enclosure.	
Event log	600 events.	
Operating temperature	– -10°C to 60°C	
Indications	– **ALARM** – **red** LED – **Buzzer** – **DISCHARGED** – **red** LED – **FAULT** – **amber** LED	– **ISOLATED** – **amber** LED – **POWER** – FAULT **amber** LED – **POWER** – ON **green** LED – **PRE-DISCHARGE** – **amber** and **red** LEDs
Inputs	– **1** conventional **detection** input (supervised for open circuit and earth faults) ▪ Compatible for use with**:** Hochiki marine smoke or thermal detectors, LHD cable and thermal probes. ▪ **Line voltage**: Regulated 20V (default), programmable for 12V to 27V in 1V increments ▪ **Maximum** detector quiescent current: 1.3mA ▪ **End of Line:** 3.3KΩ +/- 5%, 0.5W resistor – **1 discharge confirmation** input (latching volt-free). ▪ **Line supervision:** disabled by default ▪ **Input polarity:** (Configurable): Normally closed (default) or normally open. ▪ **End of Line:** 1000Ω +/- 5%, 0.25W resistor	

© 2018 Kidde Australia Pty Ltd

Marine Vessel Panel Features and Specifications	
Feature	**Description**
Outputs	– **1 auxiliary** output ▪ **Type:** Source output with overload protection ▪ **Maximum output current:** 2 amperes ▪ **Output voltage:** Panel supply voltage ▪ **Line supervision:** None The auxiliary output can be configured if desired to provide a continuous DC power supply of the same voltage as the supply voltage for the panel. See **Configuration settings using DIP switches,** page **31** – **1 pre-discharge alarm output** ▪ **Type:** Source output with overload protection ▪ **Maximum output current:** 2 amperes ▪ **Output voltage:** Panel supply voltage ▪ **Line supervision:** None – **1 discharge output** ▪ **Type:** Source output with overload protection ▪ **Maximum output current:** 1 ampere. ▪ **Output voltage:** Panel supply voltage. ▪ **Line supervision:** Open-circuit (Configurable, enabled by default) and earth fault. ▪ **Output drive mode (Configurable):** Stat-X (Default) or Solenoid: ▪ Up **to 3** Stat-*X*® aerosol generators, connected in series for **systems with minimum voltage of 8V (12V nominal).** **OR** ▪ **Up to 8** Stat-***X***® generators for systems with minimum supply voltage of 20V (**24V nominal)**. **OR** ▪ 1 **DC** solenoid rated at panel incoming supply voltage (consumes <= 1A).
Power supply	– **2** x power supply inputs ▪ **Nominal:** 12V or 24V DC ▪ **Minimum:** 8V DC ▪ **Maximum:** 30V DC ▪ **Maximum current:** 9A

Table 1: MV Panel Features and Specifications

© 2018 Kidde Australia Pty Ltd

Typical system operation

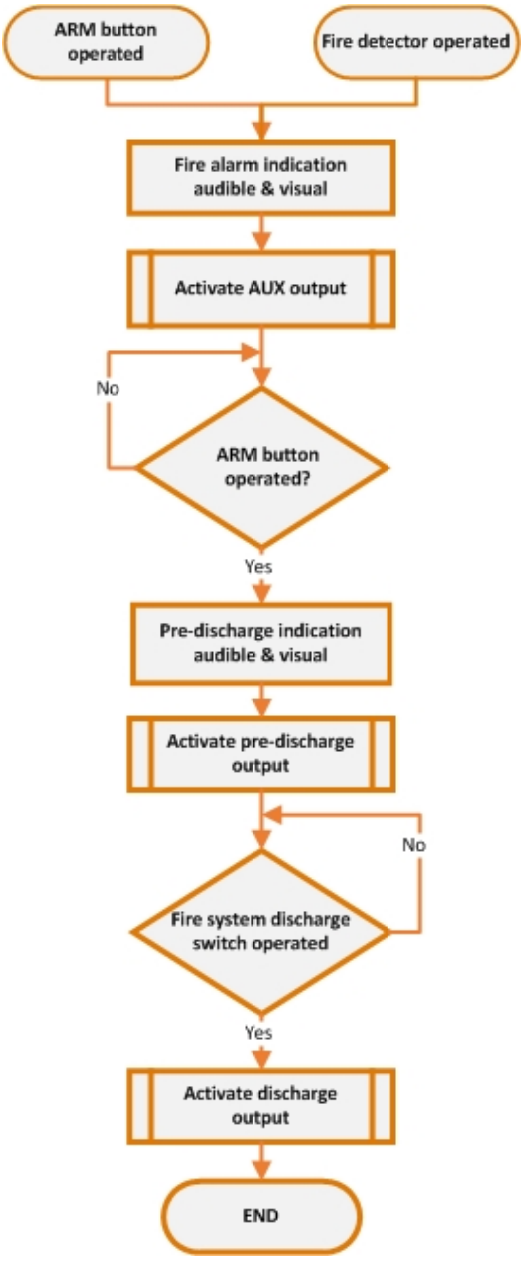

Figure 2: Typical system operation

© 2018 Kidde Australia Pty Ltd

Overview of MV panel operation

The table below lists the **LED** and **audible indications** as well as the **controls** fitted to MV panels, and describes the operation and functionality of each.

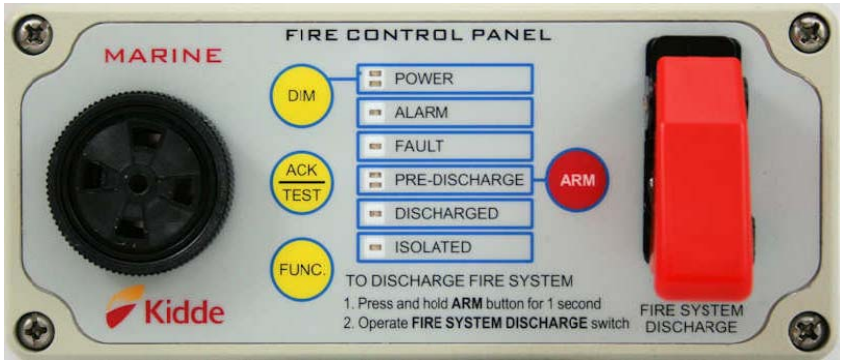

Figure 3: Marine vessel (MV) panel

Visual and audible indications

LED Indicators	Description
	The **green** **POWER** LED illuminates when primary power supply is present.
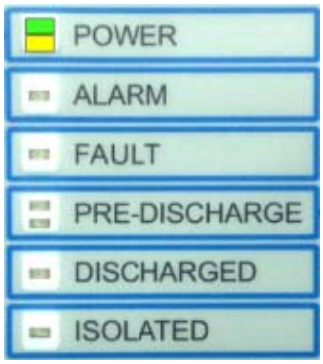	The **amber** **POWER** LED: – Flashes when primary power supply voltage falls **below** 5.5 V. This indication is informative for troubleshooting purposes. – The LED turns off when voltage is recovered **above** 6.5 V. **Note** The **green** **POWER** LED will remain illuminated whilst the **amber** **POWER** LED flashes.

© 2018 Kidde Australia Pty Ltd

LED Indicators	Description
	An **ALARM** condition **occurs** when: – **Any** detection device operates. This causes the **Red ALARM** LED to illuminate and panel **buzzer** to sound once per second and the Auxiliary output to operate (default configuration). – The **ARM** button is pressed for one second. See **The amber PRE-DISCHARGE LED** below. The panel will remain in **ALARM** condition until manually reset.
	A **FAULT** condition **causes**: – **Amber FAULT** LED to illuminate. – Panel **buzzer** to sound once every 10 seconds.
	The **amber PRE-DISCHARGE** LED: – Illuminates when the **ARM** button is pushed for 1 second. – Panel **buzzer** sounds continuously. – Flashes during the set delay countdown period – if the discharge delay timer is set to a value **greater** than 0 second.
	At the **end** of the delay period the: – **Amber PRE-DISCHARGE** LED turns OFF, and **red PRE-DISCHARGE** LED illuminates. – **FIRE SYSTEM DISCHARGE** (manual discharge) switch is **enabled** for use.

© 2018 Kidde Australia Pty Ltd

LED Indicators	Description
	The **DISCHARGED** indicator is an optional feature which is **disabled by default**. When disabled, the system will automatically activate the **DISCHARGED** indicator when the actuation output is operated. The **DISCHARGED** confirmation input **can be enabled** via the system configuration facility (DIP switch No. 1) See **Discharge confirmation enable**, on page **31.** When enabled, a **DISCHARGED** condition is **initiated** when the discharge confirmation (thermal) switch and discharge output have **both** operated. A **DISCHARGED** condition **causes:** – The **red DISCHARGED** LED to illuminate. – **Panel buzzer** sounds once every second for 15 seconds and then once every 10 seconds The **DISCHARGED** indicator will remain illuminated until the panel is reset.
	The outputs from the panel can be **isolated** to allow for **testing** or **maintenance** of detection inputs and manual release **without** causing the discharge of the system. The panel can be isolated or de-isolated by either: - Activating the **SYSTEM ISOLATE** switch located on the PCB inside the panel enclosure. See **System Isolate**, on **page 33**. OR - Press and hold down **FUNC** button for **10 seconds** Activating the **SYSTEM ISOLATE** switch **causes**: – Amber **ISOLATED** LED to illuminate. – Discharge output to be isolated. – Panel **buzzer** to sound **once** every 60 seconds. **Note** All **inputs** and indicators, **remain enabled** when the panel is **ISOLATED**. **Note** The **SYSTEM ISOLATE** switch on the PCB will have precedence over the keypad isolate facility. If the DIP switch is set (ON), it will not be possible to de-isolate the system using keypad.

Table 2: Visual (LED) and Audible indications

© 2018 Kidde Australia Pty Ltd

User controls

Controls	Functionality
	**Dim function** Used to adjust the brightness of the LED indicators to suit changing light conditions. Holding down the **DIM** button adjusts the LED intensity. Note **DIM** LED intensity can only be adjusted when there are *no* **FAULT** conditions present. **Fault diagnostic function** Holding down the **DIM** button **while** the panel is in a **FAULT** condition, initiates fault diagnostic mode. See **Fault diagnostics**, page **44.**
 **Combination Acknowledge and Test function**	**Test function** Used to **test** the operation of all LED **indicators**, panel **Buzzer** pre-discharge and auxiliary outputs. Pressing the **ACK | TEST** push button causes: – All LED indicators to illuminate. – Panel buzzer to sound continuously. – Auxiliary output to operate (if not configured to provide power). – Pre-discharge alarm output to operate. Note Test function can only be performed when the panel is in an 'idle state' – when **no** fault or alarm conditions exist. **Acknowledge function** Used to **acknowledge** any fault or alarm conditions, and to silence the panel **Buzzer** and reset auxiliary output (if not configured to provide power). Pressing the **ACK | TEST** button for **2 seconds** will suppress the panel **buzzer** operation and operation of the auxiliary output for 60 minutes **unless** a new fault or alarm is detected. At the end of this period, the **FAULT** or **ALARM** can be **acknowledged** for a further 60 minutes. Note By default, the **acknowledge** function is **only** available when the panel is in a **FAULT** or **ALARM** condition.
	Used to commence the pre-discharge delay timer and to allow the vessel fire emergency procedures to be completed. Press and hold the **ARM** button for 1 second causes: – **Red ALARM** LED to illuminate. – Panel **buzzer** to sound continuously. – Pre-discharge alarm output to operate. – Auxiliary output to operate (if not configured to provide power). – **Amber PRE-DISCHARGE** LED to illuminate (**flash**) during the pre-discharge delay period. – **Amber PRE-DISCHARGE** LED to turn **OFF** at the end of the pre-discharge delay period. – **Red PRE-DISCHARGE** LED to illuminate. – At the end of the delay period, the **FIRE SYSTEM DISCHARGE** (manual discharge) switch is enabled for use.

© 2018 Kidde Australia Pty Ltd

Controls	Functionality
 **FIRE SYSTEM DISCHARGE switch**	Used to manually discharge the fire suppression system. The **FIRE SYSTEM DISCHARGE** switch is enabled only when the **ARM** button is operated and the **PRE-DISCHARGE** delay period has **expired**. Operation of the **FIRE SYSTEM DISCHARGE** switch causes: – Discharge output to operate. – Panel **Buzzer** to sound once every second for 15 seconds.
	Used in conjunction with other panel buttons to perform additional functions: – Isolate panel. See Visual and Audible Indications, page **12** – Reset post discharged fault. See Post discharge reset, page **41.** – Restore system configuration to factory default settings. See Factory reset**,** page **41.** – Show firmware version. See **MV** panel firmware, page **43**.
 and  **System reset function**	Used to reset the panel following a **FAULT** or **ALARM** condition. A **system reset** is achieved by pushing the **DIM** and **ACK | TEST** buttons at the same time and holding both for at least **2 seconds**. See System reset, page **40**.

Table 3: User Controls

© 2018 Kidde Australia Pty Ltd

Fire detection, control and alarm components

Part numbers for the MV panel and associated components are listed in the table below.

Fire Detection, Control and Alarm Components		
Part	**Part Number**	**Description**
	001-927	Marine vessel (MV) panel
	12011F	Smoke Detector Optical (Hochiki Marine Grade – SLR-E3NM)
	12016F	Thermal Detector 60°C (Hochiki Marine Grade – DCD-AE3/M)
	12012F	Thermal Detector 90°C (Hochiki Marine Grade – DCD-CE3/M)
	12013F	Detector base (Hochiki Marine Grade – YBN-R/6M)
	12014F	Water-tight detector mounting box c/w glands (Hochiki MBB-1)
	SP668-332	3k3 ohm, 2 watt end-of-line resistor (For conventional detectors)
	87000	LHD cable Red – 177 to 189°C (Max. ambient temp – 105°C)
	H9650	LHD cable White – 229 to 251°C (Max. ambient temp – 200°C)

© 2018 Kidde Australia Pty Ltd

Fire Detection, Control and Alarm Components		
Part	**Part Number**	**Description**
 	135982	Cable manual release kit x 1m
	135983	Cable manual release kit x 3m
	135984	Cable manual release kit x 6m
 NOTE: GKW cable has smaller insulation and is more flexible than FR cable	87060	Two core, GKW, fire-rated cable
	87061	Four core, GKW, fire-rated cable
	121256	FR twin core, fire-rated cable (2 x 0.75 mm)
	128713	FR four core, fire-rated cable (4 x 0.75 mm)
	103198	P-clip 19 mm
	90950	Rubber grommet suits LHD or GKW twin core cable (Use with P-clip 103198)
	103248	Rubber grommet – suits GKW four core cable (Use with P-clip 103198)
	001-987.4	End-of-line module for use with LV and VS-MKII panels (Mount using P-clip 103198)
	001-987.4	3k3 ohm end-of-line resistor assembly for use with LV and VS-MKII panels (service part)

© 2018 Kidde Australia Pty Ltd

Fire Detection, Control and Alarm Components		
Part	**Part Number**	**Description**
	128819	P-clip 6 mm – suits GKW twin core cable
	001-984.1	In-line brass enclosure with connector block
	001-929	LV / MV Test box
	14590	E-match Tester
	255-982	Cable RS 232 – used to connect a computer to LV/MV/VS MKII panels for advanced configuration and maintenance tasks
	USB-232-1	USB to RS 232 converter
	136003	Temp indicator sticker 40-71o C Series A (10 indicators in Pack)
	136004	Temp indicator sticker 77-116o C Series B (10 indicators in Pack)
	136007	Temp indicator sticker 121-160oC Series C (10 indicators in Pack)
	136005	Temp indicator sticker 166-204o C Series D (10 indicators in Pack)
	136006	Temp indicator sticker 210-260oC Series E (10 indicators in Pack)

© 2018 Kidde Australia Pty Ltd

Fire Detection, Control and Alarm Components		
Part	**Part Number**	**Description**
	132445	Flashni Sounder/Strobe (red lens) – 9-15 V
	31015F	Flashni Sounder/Strobe (red lens) – 18-30 V
	132830	Flashni Sounder/Strobe (amber lens) – 9-15 V
	132831	Flashni Sounder/Strobe (amber lens) – 18-30 V

Table 4: Fire Detection, Control and Alarm Components

© 2018 Kidde Australia Pty Ltd

Installation guidelines

This section contains information about:

— **MV panels and power supply,** see page **20.**
— **Accessories,** see page **21.**
— **Changing the cable entry position,** see page **21.**
— **Pin connections,** see page **23.**
— **Installation of detection devices,** see page **25.**
— **Installing Stat-X® aerosol generators,** see page **27.**
— **Installation of warning devices,** see page **28.**
— **Auxiliary output,** see page **28.**
— **Anti-Tamper Seal,** see page **29.**

© 2018 Kidde Australia Pty Ltd

MV panels and power supply

MV panels should be installed within reach of the vessel operator.

1 Check that the intended installation location:

- Provides access for operational and maintenance purposes.
- Provides protection from damage.
- Is isolated from high-power RF (radio frequency) equipment.
- Complies with Kidde specifications and customer requirements.

2 Secure the panel using the four ø9.5mm corner mounting holes as shown in **Figure 4.**

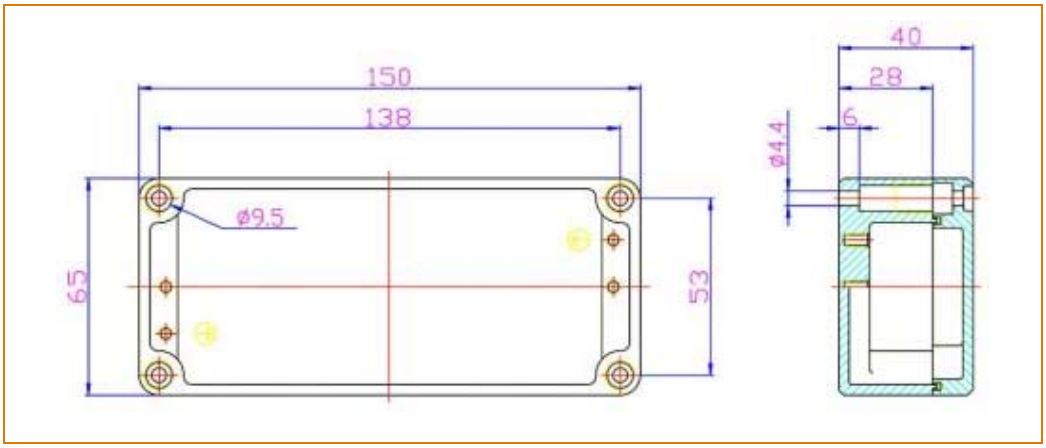

Figure 4: Panel dimensions and mounting holes

Use bolts that have thread diameter **no** greater than 4.4 mm and a head diameter **no** greater than 9.5 mm.

Important Drilling holes through the enclosure wall to mount the panel will **compromise** its IP rating and **void** the warranty.

3 The power supply for the MV panel must:

- Be connected directly to the vessel's primary and emergency power supplies.
- Use fire-rated cables.
- Include an in-line, 10 A fuse on **both** the positive (+) and negative (–) inputs.

Note Fusing the negative (–ve) input prevents **excessive return current** passing through the MV panel in the event that one of the panel inputs or outputs is **shorted** to ground or to an external high power circuit.

© 2018 Kidde Australia Pty Ltd

Accessories

The MV panel has 2 x 400 mm fire-rated cable fly leads fitted with Deutsch DT series connectors:

- Each panel is supplied with a set of mating Deutsch connectors, connector pins, plugs, 4 x fibre washers and an anti-tamper seal.
- The fibre washers are used if changing the entry position of the fly leads into the panel enclosure.
- The anti-tamper seal is provided to fit to the **FIRE SYSTEM DISCHARGE** switch cover (missile switch cover) once installation and commissioning of the system has been completed.



Figure 5: MV panel 4-way and 12-way Deutsch DT series connectors



Figure 6: Mating Deutsch connectors, pins, plugs and anti-tamper seal

Changing the cable entry position

MV panels are supplied with 2 x 400 mm fire-rated cable fly leads fitted with Deutsch DT series connectors entering the rear of the panel enclosure.

If required, the fly leads can be reconfigured to enter through the bottom of the enclosure.

To change the cable entry position, complete the following:

1. Remove the front of the panel enclosure by unscrewing the 4 screws.
2. Loosen both cable entry glands to remove some of the tension on the cables and allow the cover to open easily.



Figure 7: Opening panel enclosure

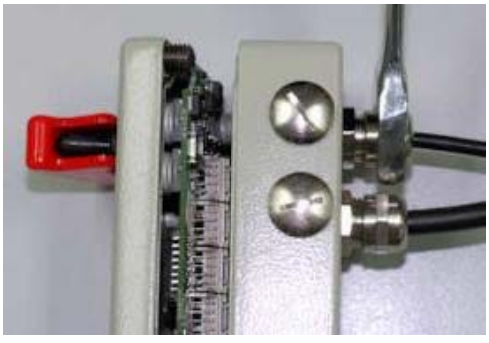

Figure 8: Loosening the cable entry glands

© 2018 Kidde Australia Pty Ltd

3 Check for markings on the PCB connectors **before** disconnecting.

To remove PCB connectors, push down on the clip on the top of the connector, whilst at the same time, pulling the connector from the board

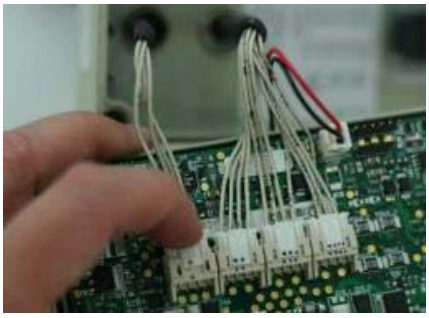

Figure 9: PCB connectors

4 Slide the cable gland nuts and inserts back and unscrew the nuts on the cable gland fitting with a 17 mm spanner.

Pull the cables through the openings and remove the blanking plugs from the other enclosure entry points.



Figure 10: Removing the cable glands



Figure 11: Removing the blanking plugs

5 Fit **2 x** fibre washers to **each** blanking plug and screw the blanking plugs back into the **rear holes** of the panel enclosure (**from inside** the enclosure).



Figure 12: Fitting 2 x fibre washers



Figure 13: Fitting 2 x fibre washers and blanking plugs fitted inside enclosure rear entry holes

Note The fibre washers are used so that the threads of the blanking plugs do **not protrude** from the panel enclosure.

© 2018 Kidde Australia Pty Ltd

6 Fit the cable gland fittings into bottom holes of the enclosure:

- Re-attach the cable connectors to the PCB.
- Tighten the cable gland nuts.



Figure 14: Re-installing cable connectors and re-fitting cable glands

Pin connections

To complete field wiring, each panel is supplied with mating Deutsch connectors. The diagram in **Figure 1**, showing the pin assignments for each connector, is also included on a label located inside the panel enclosure.

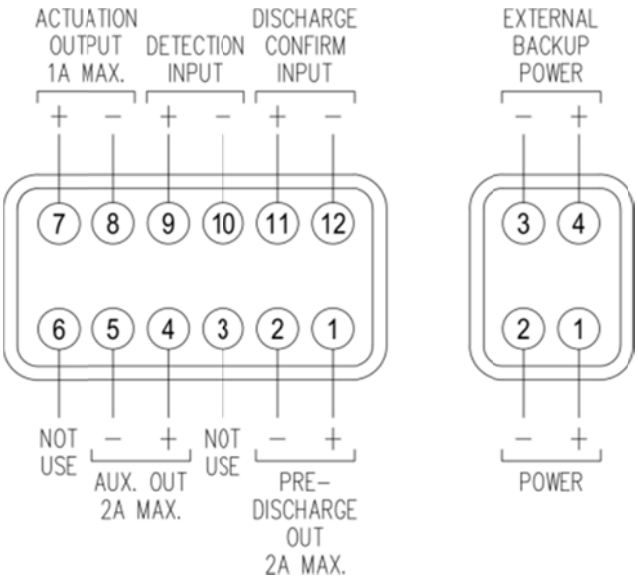

Figure 1: Connector pin assignments

Important To **maintain** the IP rating of the connectors, **ensure** that blanking plugs are fitted to **any** *unused* cable entries.

© 2018 Kidde Australia Pty Ltd

The pin connections for each fly leads are:

— **4-way** series connector

4-Way Deutsch Connector		
Function	**Pin Number**	**Polarity**
Primary power **input**	**1**	**+ve**
	2	**–ve**
Secondary power **input**	**3**	**–ve**
	4	**+ve**

Table 5: 4-Way Deutsch connector pin assignments

— **12-way** series connector

12-Way Deutsch Connector		
Function	**Pin Number**	**Polarity**
Pre-discharge alarm **output**	**1**	**+ve**
	2	**–ve**
'Not used'	**3**	**n/a**
Auxiliary relay **output**	**4**	**+ve**
	5	**–ve**
'Not used'	**6**	**n/a**
Discharge **output**	**7**	**+ve**
	8	**–ve**
Detection **input**	**9**	**+ve**
	10	**–ve**
Discharge confirmation **input**	**11**	**+ve**
	12	**–ve**

Table 6: 12-Way Deutsch connector pin assignments

Wire gauge size

The recommended wire gauge sizes the MV panel is:

Type	Area (mm^2)	AWG size	Current Capacity (A)
Power	**0.75**	**18**	**10**
I/O's	**0.75**	**18**	**6**

Table 7: MV panel wire gauge size

© 2018 Kidde Australia Pty Ltd

Installation of detection devices

Point type smoke and thermal fire detectors are typically used to provide fire detection in marine systems, however linear heat detection cable (LHD) may also be utilised if desired.

Refer to the *Light vehicle (LV) panel installation and maintenance manual* for information about installing LHD cable.

The MV panel:

- **Supports** up to **20** Hochiki **marine** smoke and thermal detectors.
- **Monitors** the detection circuit for both short circuit (ground-shorted) and open circuit conditions.

Note Ensure the dust covers supplied fitted to the detectors are **removed** at the time of installation **or** commissioning.



Figure 15: Hochiki thermal detectors: 60°C – P.N. 12016F and 90°C – P.N. 12012F



Figure 16: Hochiki optical smoke detector: P.N. – 12011F

A **common** detector base is used to install each detector.



Figure 17: Hochiki YBN-R/6M common detector base: P.N. 12013F



Figure 18: Hochiki optional water-tight detector mounting box complete with cable glands: P.N. 12014F

If required, the detector base can be mounted to an optional water tight mounting box,

© 2018 Kidde Australia Pty Ltd

Wiring multiple point detectors

Multiple point detectors **must** be wired in parallel.

End-of-line resistor

A **3K3 ¼ W** end-of-line resistor (EOL) is used for supervision of the detection circuit and is installed on the **last detector** base in the circuit between **terminals 1 and 6.**

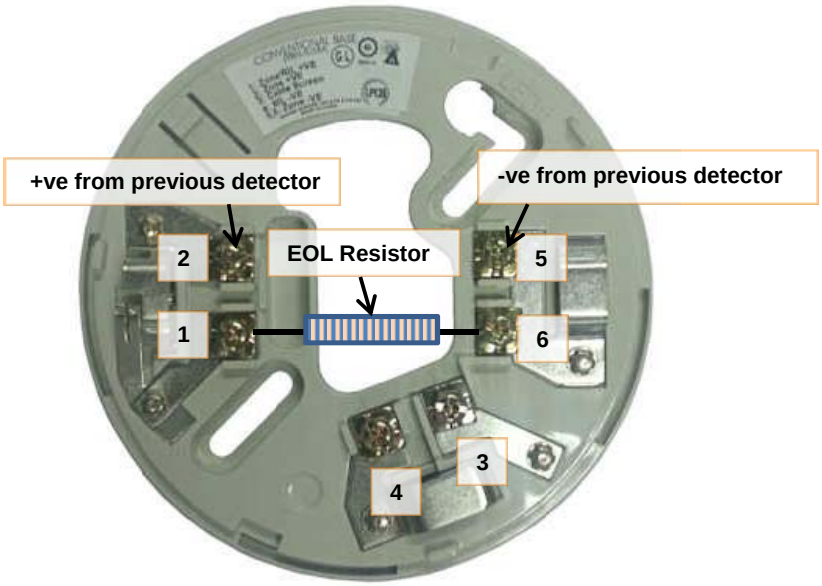

Figure 19: Hochiki YBN R/6M common detector base with an EOL resistor connected across terminals 1 and 6

The following table (Table 8) details the terminal connections for the Hochiki YBN-R/6M **common** detector base.

Terminal No.	Wiring Connections
1	**Outgoing +ve / EOL**
2	Incoming **+**ve
3	*'Not used'*
4	*'Not used'*
5	Incoming –ve
6	**Outgoing –ve / EOL**

Table 8: Terminal connections for Hochiki YBN-R/6M common detector base

© 2018 Kidde Australia Pty Ltd

Installing a discharge confirmation switch

A 'discharge' switch is used to confirm that the agent has been released from the fire suppression system. For Stat-**X**® systems, a **thermal switch** is used to provide this discharge confirmation.

Installation of a discharge confirmation switch is **recommended**, but **not mandatory**, for marine installations.

For details of how to install a discharge confirmation (thermal) switch on Stat-**X**® generators, refer to the *Design, install, commission and maintenance manual for Stat-**X**® fire suppression systems for vehicle and marine applications.*

When installing a discharge thermal switch connect to pins **11** and **12** of the MV panel 12-way connector using fire-rated cable.

If a thermal switch is going to be installed, **DIP Switch no. 1** on the panel PCB must be changed to the on position to enable the input. See page **Configuration settings using DIP switches**, page **31**.

Note For panels with firmware versions **prior** to V1.0-2, a bridge must be made between pins 11 and 12 of the panel's 12-way connector.

Installing Stat-X® aerosol generators

A maximum of **3** (12 volt systems) or **8** (24 volt systems) Stat-**X**® generators can be installed in the MV panel discharge circuit. Stat-**X**® generators **must** be connected in **series**:

- For a **12 volt** system using **3** x Stat-**X**® generators, the **maximum** total conductor length in the discharge circuit is limited to approximately **80 metres**.
- For a **24 volt** system using **8** x Stat-**X**® generators, the **maximum** total conductor length in the discharge circuit is limited to approximately **120 metres**.

Refer to the *Design, install, commission and maintenance manual for Stat-**X**® fire suppression systems for vehicle and marine applications* for additional information about installing Stat-**X**® aerosol generators.

© 2018 Kidde Australia Pty Ltd

Installation of warning devices

The **pre-discharge alarm output** is used to:

— **Operate** a siren or strobe installed in the protected space.

— **Warn** occupants of the protected space to evacuate **before** the fire suppression system is discharged.

Note According to the NSCV, the evacuation alarm needs to be separate and distinct from any fire alarm, including a different sound, separate warning lights and wiring. If the **auxiliary output** is being used to operate a separate warning device, ensure that the device is different to the **pre-discharge alarm**.

The pre-discharge alarm output switches the panel's incoming power supply voltage – devices connected to this circuit must be capable of operating off this voltage (normally 12 or 24 V DC).

The MV panel supports up to **10** Flashni combined sounder strobe variants (either 12 or 24V DC). Flashni combined sounder support different tone combinations.

A wiring diagram showing multiple sounder/strobes wired to the pre-discharge alarm output is provided in the Appendices as an example.

Auxiliary output

The auxiliary output can be used to:

— **Operate** an external warning devices with the same electrical specifications described for the pre-discharge alarm output.

Note An **ALARM** condition **causes the** Auxiliary output to operate (default configuration)

— **Interface** with other systems, as required.

— **Provide** a constant supply output of up to **2A** at system voltage (identical to the MV panel power supply voltage) that can be used to power external devices. To enable the Auxiliary output to operate in this mode, a configuration change is required. See also **Configuration settings using DIP switches**, page **31.**

© 2018 Kidde Australia Pty Ltd

Anti-Tamper Seal

Fitting the anti-tamper seal to the **FIRE SYSTEM DISCHARGE** switch cover (missile switch cover) once installation and commissioning of the system has been completed.

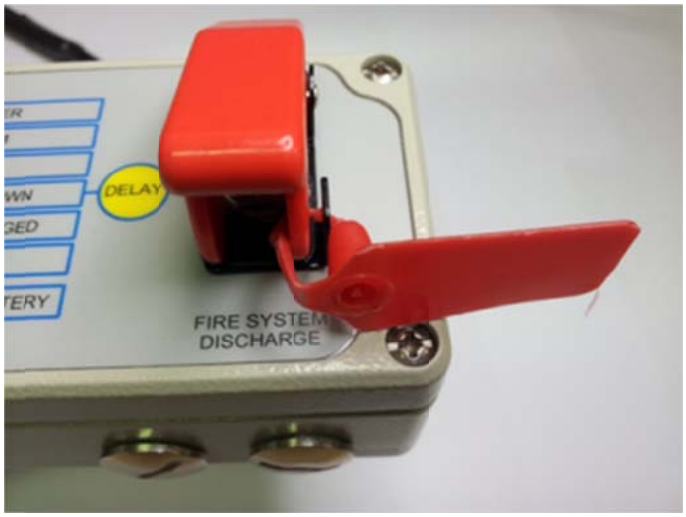

Figure 20: Fitting anti-tamper seal

© 2018 Kidde Australia Pty Ltd

Panel configuration settings

This section contains information about:

— **Configuration settings using DIP switches**, see page **31**.
— **Terminal interface**, see page **33.**

© 2018 Kidde Australia Pty Ltd

Configuration settings using DIP switches

The following configuration settings can be changed using DIP switches on the MV panel PCB:

- Discharge confirmation bypass.
- Pre-discharge delay.
- Auxiliary output delay.
- System isolate.

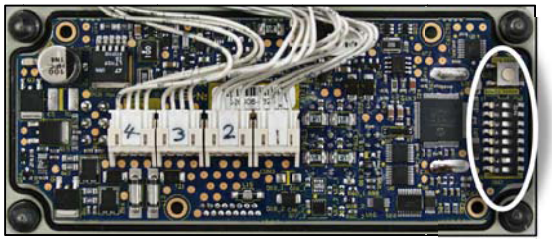

Figure 21: DIP switches on MV panel PCB

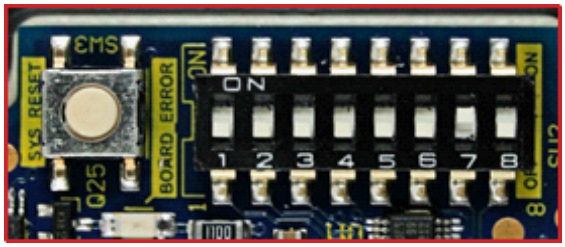

Figure 22: DIP Switches and Reset Button

A small bladed screwdriver should be used to change switch positions. Be careful **not to apply** excessive force to the switches. **SW2** switch numbers **2** and **3** are currently unassigned.

Discharge confirmation enable

If a thermal switch is going to be installed, the supervision of the circuit must be enabled by changing DIP Switch no. 1 on the panel PCB to the **ON** position.

SW2 Switch Number	State	Function
1	**ON**	Discharge confirmation input enabled
	OFF (default)	Discharge confirmation input disabled – see Note below

Table 9: Pre-discharge delay timer settings

Note After **changing** the 'Discharge confirmation setting' using the DIP switches, a **system reset** is required to commit the setting change to the panel memory. See System reset function, on page **40**.

© 2018 Kidde Australia Pty Ltd

Pre-discharge delay

The pre-discharge delay timer is incorporated in the system to allow the fire emergency procedures on the vessel to be completed **before** the **FIRE SYSTEM DISCHARGE** switch can be activated.

Pre-discharge time delays are configured using DIP switches **4**, **5** and **6**. See **Table 10** below.

Time (seconds)	SW2 Switch Number		
	4	5	6
0 (default)	**OFF**	**OFF**	**OFF**
5	ON	OFF	OFF
10	OFF	ON	OFF
15	ON	ON	OFF
20	OFF	OFF	ON
30	ON	OFF	ON
40	OFF	ON	ON
60	ON	ON	ON

Table 10: Pre-discharge delay timer settings

Note After **changing** the 'pre-discharge time delay setting' using the DIP switches, a **system reset** is required to commit the change to the panel memory. See System reset function, on page **40.**

Auxiliary output operation

Auxiliary output mode of operation is configured using DIP switch **7**. See **Table 11** below.

SW2 Switch Number	State	Function
7	ON	Power supply output enabled – see Note below
	OFF (default)	Power supply output disabled

Table 11: Configuration – auxiliary output

Note After **changing** the 'auxiliary output operation setting' using the DIP switches, a **system reset** is required to commit the setting change to the panel memory. See **System reset** function, on page **40.**

© 2018 Kidde Australia Pty Ltd

System isolate

The system isolate switch:

- **Isolates** the discharge output.
- **Allows** testing of the manual release and detection inputs, as well as fault conditions, without causing discharge of the system.
- DIP switch **8** is used as the system isolate switch. See **Table 12**: below.

SW2 Switch Number	State	Function
8	ON	System isolated
	OFF (default)	**System de-isolated**

Table 12: System isolate switch settings

Terminal interface

The MV panel is fitted with an RS 232 serial port to allow technicians to perform advanced configuration, commissioning and maintenance tasks including:

- Viewing system information (such as, voltages, temperature and panel status).
- Viewing and downloading logs (such as, event history and trend logs).
- Viewing and setting the real time clock (RTC).
- Changing system configuration settings that are only configurable via software.
- Uploading firmware updates.

Accessing these features requires a computer connected to the RS 232 serial port of the MV panel. The following items are required, as a minimum:

- VS serial cable.
- VS terminal software package V5, or later.
- A PC or laptop running Windows XP™, or later.
- A CommFront USB to RS 232 converter (**only** required if the PC or laptop, to be used, does **not** have an RS 232 serial port)

.

Important **Generic brands** of USB to RS 232 converters are **not** recommended due to **incompatibility** issues.

For full details on using the RS 232 serial ports and completing advanced configuration, commissioning and maintenance tasks, please refer to the manual: *Terminal Interface for LV and MV Panels*.

© 2018 Kidde Australia Pty Ltd

Commissioning

This section contains information about:

— **Commissioning MV panels**, see page **35.**

© 2018 Kidde Australia Pty Ltd

Commissioning MV panels

MV panels can be installed as a stand-alone detection system but more likely to be installed as in conjunction with a fire suppression system.

Regardless of the configuration or complexity of the fire system, a **full** commissioning test **must** be completed **prior** to placing the system into service to ensure that the system is installed correctly, meets design specifications and is fully functional.

A commissioning checklist is used to confirm that:

- Installation requirements have been adhered to.
- System components have been correctly installed and tested.

Minimum commissioning checks

The minimum commissioning checks that need to be carried out on MV panels are:

Minimum Commissioning Checks	Details
1 System configuration and signage	– System configuration as per design – Signs and warning labels installed
2 Real-time clock	– Set the **real-time clock** to current time and date Note Resetting the 'real-time' clock requires the use of a computer connected to the RS 232 serial port of the MV panel. Refer to **Terminal interface** on page **33** for further information.
3 Electric detection, actuation and alarm systems	– Manual actuators provided at specified locations and easily accessible – Detectors fitted in fire hazard areas – MV panel installed at vessel operators location – Field cabling installed
4 Function tests	– MV panel function tested – Audible and visual fire and fault alarms tested – Pre-discharge delay recorded in seconds – Each manual actuator and detector initiate alarms – Discharge circuit resistance checks completed – System discharge function tested

© 2018 Kidde Australia Pty Ltd

Minimum Commissioning Checks	Details
5 Discharge switch anti-tamper seal	– Anti-tamper seal fitted to **FIRE SYSTEM DISCHARGE** switch 

Table 13: Minimum commissioning checklist

It is recommended that a full capture of the MV panel system settings is downloaded as part of commissioning.

Downloading the panel system settings requires the use of a computer connected to the RS 232 serial port of the MV panel. Refer to **Terminal interface** on page **33** for further information.

Note A detailed **Marine system commissioning checklist** is provided on page **52** and a **Stat-X® marine system commissioning report** is provided on page **54.**

© 2018 Kidde Australia Pty Ltd

Maintenance

This section contains information about:

— **Routine service schedules**, see page **38.**
— **Reset procedures**, see page **40.**

© 2018 Kidde Australia Pty Ltd

Routine service schedules

Maintenance of marine fire protection systems should be carried out in accordance with AS 1851, and as specified in the *National Standard for Commercial Vessels (NSCV) part C design and construction, section 4 fire safety, chapter 13 Servicing of fire equipment*.

A summary of the routine maintenance requirements for MV panels is provided in this section. The following maintenance schedule sets out **minimum** requirements **only**.

In all cases, local conditions where the system is fitted should be taken into consideration when setting maintenance frequencies. For example, in harsh environments the yearly service may need to be carried out every 6 months.

Note For information on Stat-**X**® fire suppression system maintenance, refer to the *Design, install, commission and maintenance manual for Stat-X® vehicle and marine systems*.

Daily schedule

Daily inspection items should be completed by the skipper/master of the vessel prior to operating the vessel.

Daily requirements		
Item		**Actions Required and Pass/Fail Requirement**
1	Manual actuators	**a)** Check all release anti-tamper seals and pull pins are secure and in place. **b)** Check all actuators are secure, clean, undamaged and accessible.
2	MV panel	**a)** Check that all indicators show normal condition: ▪ Inspect the display panel and confirm that **only** the **green** **POWER** indication is illuminated.  **b)** Press **and** hold the **ACK | TEST** button and confirm that: ▪ All indications illuminate. ▪ Audible **Buzzer** alarm sounds. 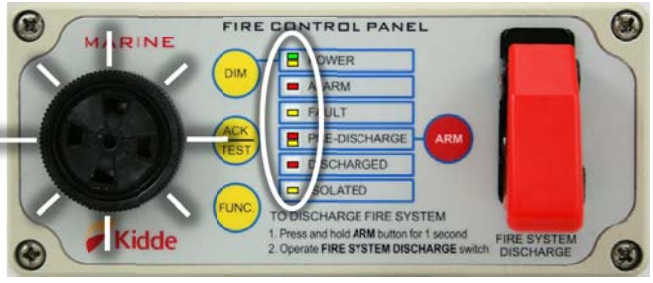

© 2018 Kidde Australia Pty Ltd

Daily requirements		
Item		**Actions Required and Pass/Fail Requirement**
		▪ **Release** the **ACK | TEST** button and confirm that **only** the **green POWER** indication is illuminated. **c)** Check that all panels are secure, clean, undamaged and accessible.

Table 14: Daily schedule

Monthly schedule

Complete the **daily** schedule, and then the **monthly** schedule.

Monthly requirements		
Item		**Actions Required and Pass/Fail Requirement**
1	Fire and pre-discharge alarms	**a)** Simulate an alarm condition by pressing the **ARM** button for one second and confirm all audible and visual fire and pre-discharge alarm indicators operate. **b)** Reset the panel by pressing the **DIM** and **ACK | TEST** buttons at the same time and holding both for at least **2 seconds**.
2	Labels	Check manual release, system warning and instruction labels are securely in place, visible and legible.

Table 15: Monthly schedule

Six-monthly schedule

Complete the **daily** and **monthly** schedules, and then the **six-monthly** schedule.

Six-monthly requirements		
Item		**Actions Required and Pass/Fail Requirement**
1	Manual actuators	Test operation of **FIRE SYSTEM DSCHARGE** switch. **Note** Ensure that the **ARM** button has **not** been operated **prior** to testing the **FIRE SYSTEM DISCHARGE** switch. Activating the discharge switch when the system is **not armed** will result in a system fault.
2	Fire and pre-discharge alarms	Inspect alarm devices for any condition or damage that is likely to adversely affect their operation.
3	Detection system	Check detectors, wiring, connections and supports are intact, not damaged and detectors are in position.
4	Discharge circuit	**a)** Disconnect the wiring in the discharge circuit and confirm the MV panel registers a fault. **b)** Test the operation of the discharge circuit.

Table 16: Six-monthly schedule

© 2018 Kidde Australia Pty Ltd

Yearly schedule

Complete the **daily**, **monthly** and **six-monthly** schedules, and then the **yearly** schedule.

Yearly requirements		
Item		**Actions Required and Pass/Fail Requirement**
1	Discharge circuit	**a)** Check discharge circuit resistance is **less** than the **maximum** allowed: ☒ **< 10 ohm** for 12V powered systems. ☒ **< 22 ohm** for 24V powered systems. **b)** Electrical resistance of discharge circuit: i. Measure the resistance of the discharge cabling in the circuit, with the Stat-**X**® **generators disconnected**, and the ends of the wires at each generator location **connected together**. ii. Measure the resistance of **each** Stat-**X**® generator. **Note** The electrical resistance reading for **each** Stat-X® generator should be between 1.4 and 2.0 ohm. iii. Connect **all** Stat-**X**® generators in the circuit and measure the **total resistance** of the circuit (cabling and Stat-**X**® generators). **Note** The resistance measured in (**iii**) should **equal** the sum of the resistances measured in (**i**) and (**ii**). If they do **not** match **check** the discharge circuit wiring for faults.
2	Fire detectors	Test operation of **each** detector.

Table 17: Yearly schedule

Reset procedures

There are *three* **different** reset procedures available on the MV panel.

Type of reset	Description
System reset	Used to reset the panel following a latching **FAULT** or **ALARM** condition. A **system reset** is achieved by pressing the **DIM** and **ACK | TEST** buttons at the same time for at least **2 seconds**. **Alternatively**, a system reset can also be achieved using the system reset push button on the MV panel PCB: Labelled **SW3** (**SYS_RESET**). Located next to DIP switch **1** on the PCB. 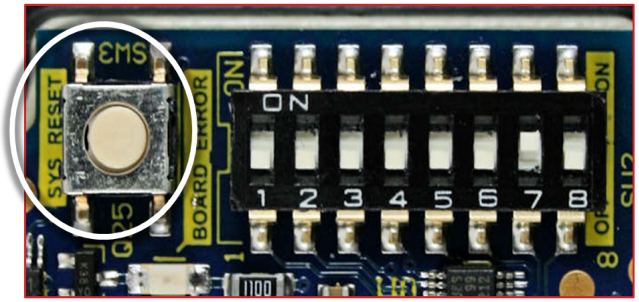 If following a **system reset**, the **FAULT** LED is still illuminated: Determine the type of fault by using the **Fault diagnostic table** on page 47. Rectify the fault as appropriate. Perform *another* **system reset**.

© 2018 Kidde Australia Pty Ltd

Type of reset	Description
Post discharge reset	A **post discharge fault** is indicated when both the **FAULT** and **DISCHARGED** LEDs are illuminated following a system reset. See **Visual and audible indications,** page **10**. **Important** A **post discharge reset** *must* **only** be undertaken after confirming the fire suppression system has been returned to operational condition, e.g. Stat-X® generators replaced or extinguishing agent cylinders re-filled. To complete a **post discharge reset**: **1** Make sure that the system is **not** isolated. **2** Press and hold the **FUNC** button. **3** Press and hold the **DIM** and **ACK | TEST** buttons. **4** Wait for the **DISCHARGED** indicator to turn off. **5** Release the **DIM** and **ACK | TEST** buttons. **6** Release the **OFF** button. If following a **post discharge fault reset**, the **DISCHARGED LED** has turned off but the **FAULT** LED is still illuminated: Determine the type of fault by using the **Fault diagnostic table** on page **47.** Rectify the fault as appropriate
Factory reset	Used to reset the panel configuration to the factory default settings: To **reset** the panel configuration to the factory default settings: **1** Isolate the system (by moving System Isolate Switch (DIP switch **8**) to **ON** position. 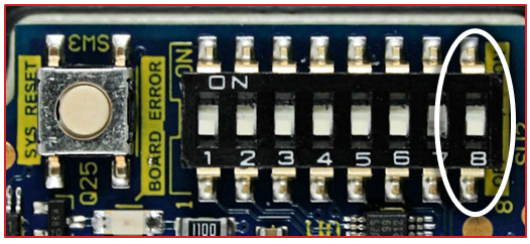 **2** Confirm that **ISOLATED** indicator is illuminated. **3** Press and hold the **FUNC** button. **4** Press and hold the **ACK | TEST** button. **5** Continue to hold **both** buttons for **3 seconds**. **6** Release the **ACK | TEST** button. **7** Release the **OFF** button. **8** Reset the system, to apply the configuration changes, by pressing the **DIM** and **ACK | TEST** buttons, at the same time, and **hold both** for at least **2 seconds**. **9** Allow 10 seconds for the system to restart and initialise. **10** Confirm that the panel is **not** in the **ALARM** state **before** proceeding to the next step. **11** De-isolate the system by switching System Isolate Switch (DIP switch **8**) to **OFF** position.

Table 18: Reset procedures

© 2018 Kidde Australia Pty Ltd

Troubleshooting MV panels

This section contains information about:

— **MV panel firmware**, see page **43.**
— **Fault indications**, see page **43.**
— **Fault diagnostics,** see page **44.**
— **Hardware and firmware faults,** see page **48.**

© 2018 Kidde Australia Pty Ltd

MV panel firmware

Operation of the MV Panel is controlled by firmware.

As new firmware versions are released, the firmware on already installed panels can be updated to the latest version using the RS 232 connection. Refer to **Terminal interface** on page **33** for further information.

When undertaking troubleshooting, it is important to find out *which* **version** of firmware is installed. To identify the firmware **version** installed on an MV panel:

1 Press and hold the **FUNC.** and **DIM** buttons.

2 Take note of which LEDs are illuminated on the panel display, and use the table below (Table 19:), to determine which firmware version is installed.

Firmware Version No.	Power (green)	Power (amber)	Alarm (red)	Fault (amber)	Pre-discharge (red)	Pre-discharge (amber)	Discharged (red)	Isolated (amber)
1.0-**0**	**ON**	OFF	OFF	OFF	OFF	OFF	OFF	OFF
1.0-**1**	**ON**	OFF	OFF	OFF	**ON**	OFF	OFF	OFF
1.0-**2**	**ON**	OFF	OFF	OFF	OFF	**ON**	OFF	OFF
1.0-**3**	**ON**	OFF	OFF	OFF	**ON**	**ON**	OFF	OFF
1.0-**4**	**ON**	OFF	OFF	OFF	OFF	OFF	**ON**	OFF
1.0-**5**	**ON**	OFF	OFF	OFF	**ON**	OFF	**ON**	OFF
1.0-**6**	**ON**	OFF	OFF	OFF	OFF	**ON**	**ON**	OFF

Table 19: Firmware version identification using LED indications

3 Write down the firmware **version** number – this information will be helpful when seeking technical support.

Fault indications

Failure of a fire alarm panel to function properly will likely be caused by one or more of the following conditions:

1 Failure of the power supply.
2 Incorrect installation.
3 Damaged wiring or corrosion.
4 Component failure.

© 2018 Kidde Australia Pty Ltd

When a failure occurs and the cause is not known, **check** as many of these items as is practical **before** starting a detailed, thorough troubleshooting process.

For example, you should **firstly** complete a visual inspection and check the following:

- If possible, obtain information about **any changes** that may have affected the system.
- Some faults, such as burned out PCB tracks or wiring can be located by sight or smell.
- Look for loose connections.
- Check for smoke or the odour of burned or overheated parts.
- Many faults on the system can be caused by problems related the power supply.
- Check battery and line voltages **before** troubleshooting the system.

> **Note** Visual inspections **alone** can often discover a fault **before** the need to undertake complex troubleshooting activities.

Fault diagnostics

A service technician must have a good understanding of the functionality of system **before** attempting corrective maintenance.

Before attempting to diagnose and repair a fault, it is recommended that you read the entire *Marine vessel (MV) panel installation and maintenance manual*.

When the MV panel detects an abnormal condition or a defect which may impair the operation of the system, audible and visual fault indications are generated:

- **Illumination** of the **FAULT** LED.
- **Sounding** of the panel **Buzzer** once every 10 seconds.

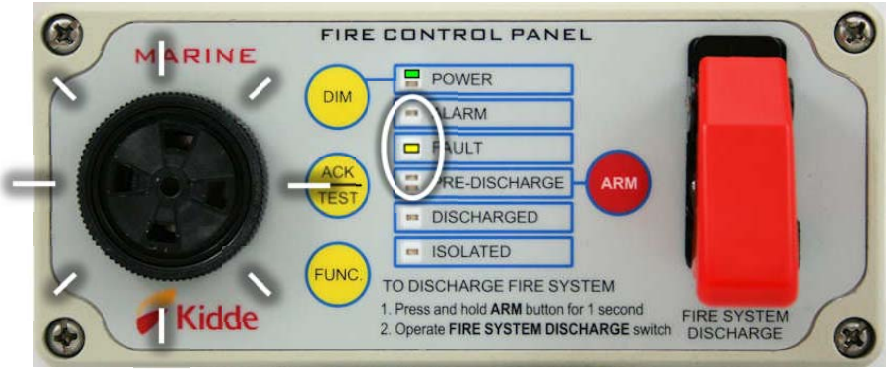

Figure 23: Marine Vessel (MV) panel – fault indication

© 2018 Kidde Australia Pty Ltd

If a **fault** condition exists, press and hold the **DIM** button:



Figure 24: Using the DIM button to diagnose other fault conditions

- Single and multiple fault conditions can be diagnosed by observing which LEDs are illuminated and **comparing** them to **Table 21** (Fault diagnostics) on page **48.**
- When using the fault diagnostics function, take note as to whether the **green POWER** LED is illuminated for each fault condition.
- The **status** (**OFF** or **ON**) of the **green POWER** LED determines which column in the fault table should be used to determine the type of fault. See **Example – Using the fault diagnostic function**Error! Reference source not found. on page **46** for information on interpreting fault conditions.
- Multiple fault indications will cycle at 2 second intervals between those indicated with green POWER LED “on” or “off

Note Each fault condition is assigned a LED. Multiple LEDS can be lit if more than one fault condition exists.

© 2018 Kidde Australia Pty Ltd

Example – Using the fault diagnostic function

The table below illustrates the importance of the Green **POWER** LED when using the fault diagnostic function.

Green POWER LED – OFF	Green POWER LED – ON
	
ALARM (**red**) fault: – Auxiliary output overloaded (latching) Corrective action: – Check circuit devices do not exceed 2 amp current draw. – Check Pre-discharge circuit wiring for short circuit and then perform a system reset.	**ALARM** (**red**) fault: – System configuration fault Corrective action: – Contact Kidde for technical support
DISCHARGED (**red**) fault: – Detection input – open circuit Corrective action: – Check detection circuit wiring	**ISOLATED** (**amber**) fault: – Discharge output ground (–ve) shorted to chassis Corrective action: – Check discharge circuit wiring

Table 20: Example of interpreting faults using fault diagnostic function

Note Faults can also be identified and history logs **displayed** using the panel's RS 232 connection. This requires a computer connected to the RS 232 serial port of the MV panel. Refer to **Terminal interface** on page **33** for further information.

In some circumstances, a **hardware** or **firmware** fault may exist. These fault conditions **cannot** be ascertained using the fault diagnostic table above. See **Hardware and firmware faults,** page **48.**

© 2018 Kidde Australia Pty Ltd

Fault diagnostic table

Illuminated LEDs		Green POWER LED Status	
		Green POWER LED – OFF	Green POWER LED – ON
1	**POWER** (Amber)	**Discharge output overloaded (latching)** – This fault will **only** be exerted if the panel has been configured to operate a solenoid actuator. Corrective action: – Check solenoid does not exceed 1 amp current draw. – Check discharge circuit wiring for short circuit and then perform a system reset.	**Discharge output operated (latching)** Corrective action: – Replace Stat-X® generators (if necessary) and perform a **post discharge reset**
2	**ALARM** (Red)	**Auxiliary output overloaded (latching)** Corrective action: – Check circuit devices do not exceed 2 amp current draw. – Check auxiliary circuit wiring for short circuit and then perform a system reset.	**System configuration fault** Corrective action: – Contact Kidde for technical support
3	**FAULT** (Amber)	**Pre-discharge output overloaded (latching)** Corrective action: – Check circuit devices do not exceed 2 amp current draw. – Check Pre-discharge circuit wiring for short circuit and then perform a system reset.	**System reset required** Corrective action: – Perform a **system reset**
4	**PRE-DISCHARGE** (Red)	**Discharge confirmation input ground (–ve) shorted to chassis** Corrective action: – Check discharge confirmation input wiring	**Discharge confirmation input activated (latching)** Corrective action: – Check discharge confirmation switch and wiring. Once the fault has been rectified, perform a **system reset**
5	**PRE-DISCHARGE** (Amber)	**Detection input ground (–ve) shorted to chassis** Corrective action: – Check detection circuit wiring	**Failed production test** Corrective action: – Replace panel
6	**DISCHARGED** (Red)	**Detection input – open circuit** Corrective action: – Check detection circuit wiring	**FIRE SYSTEM DISCHARGE** switch activated prior to being armed Corrective action: – Close discharge switch cover
7	**ISOLATED** (Amber)	**Discharge output – open circuit** Corrective action: – Check discharge circuit wiring	**Discharge output ground (–ve) shorted to chassis** Corrective action: – Check discharge circuit wiring

© 2018 Kidde Australia Pty Ltd

Illuminated LEDs		Green POWER LED Status	
		Green POWER LED – OFF	Green POWER LED – ON
8	No LEDs illuminated	**Panel has no power** – Corrective action: Check power supply, fuses, connections and equipment power isolation switches	

Table 21: Fault diagnostic table

Hardware and firmware faults

A hardware or firmware fault is indicated by intermittent or continuous operation of the panel buzzer.

If no other condition can be found to cause the buzzer to operate, remove MV panel fascia from the enclosure and check the **Board Error** indication **LD2** located next to the DIP switches on the PCB.

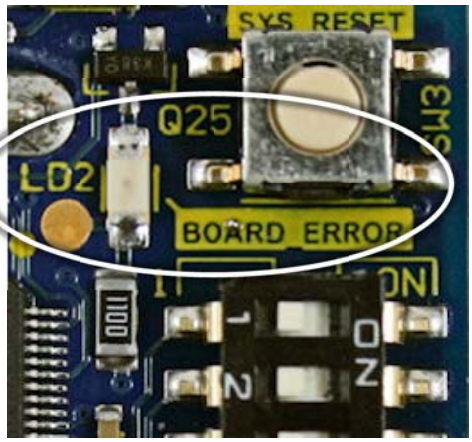

Figure 25: PCB 'Board Error' indication

If the **Board Error** indication is illuminated, a hardware or firmware fault exists as detailed in the following table.

'Board Error' Indication	Alarm Buzzer	System State	Corrective Actions
On (**flashing**)	On (**intermittent**)	Unrecoverable **hardware** fault	Replace the board
On (**permanent**)	On (**permanent**)	**Firmware** is corrupted or not loaded	Call technical support

Table 22: 'Board Error' indications

Note When powering up the MV panel, it is normal for the **Board Error** indication to **initially** turn on for approximately **2 seconds**. If the **Board Error** indication stays on for **longer** than 2 seconds, a hardware or firmware fault exists.

© 2018 Kidde Australia Pty Ltd

Appendices

This section contains information about:

— **Wiring diagram: MV panel,** see page **50.**
— **Wiring diagram: Flashni Sounders**, see page **51.**
— **Marine system commissioning checklist,** see page **52.**
— **Stat-X® marine system commissioning report,** see page **54.**
— **Service report,** see page **56.**
— **Feedback form,** see page **58.**

© 2018 Kidde Australia Pty Ltd

Wiring diagram: MV panel

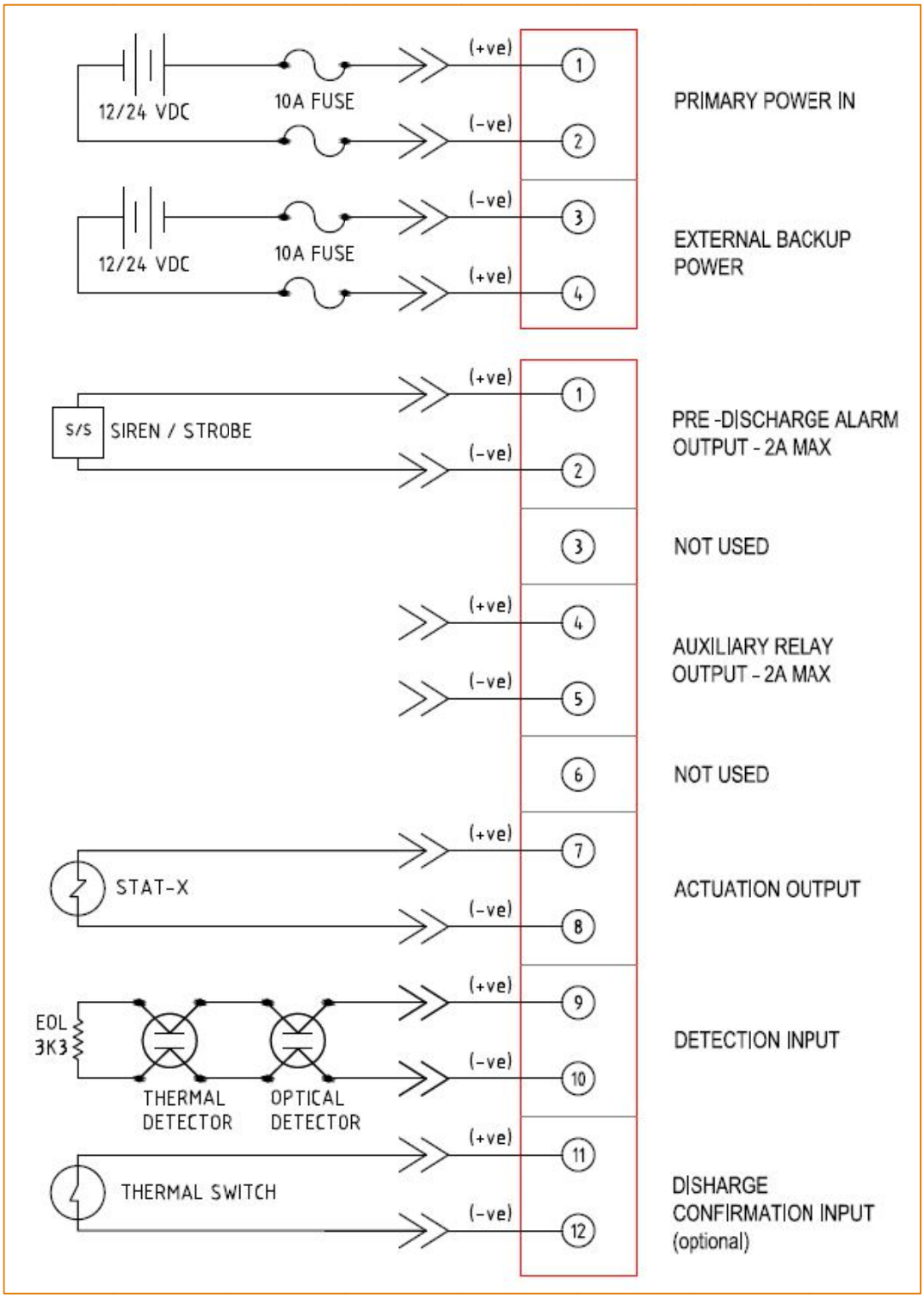

Figure 26: MV panel wiring diagram

© 2018 Kidde Australia Pty Ltd

Wiring diagram: Flashni Sounders

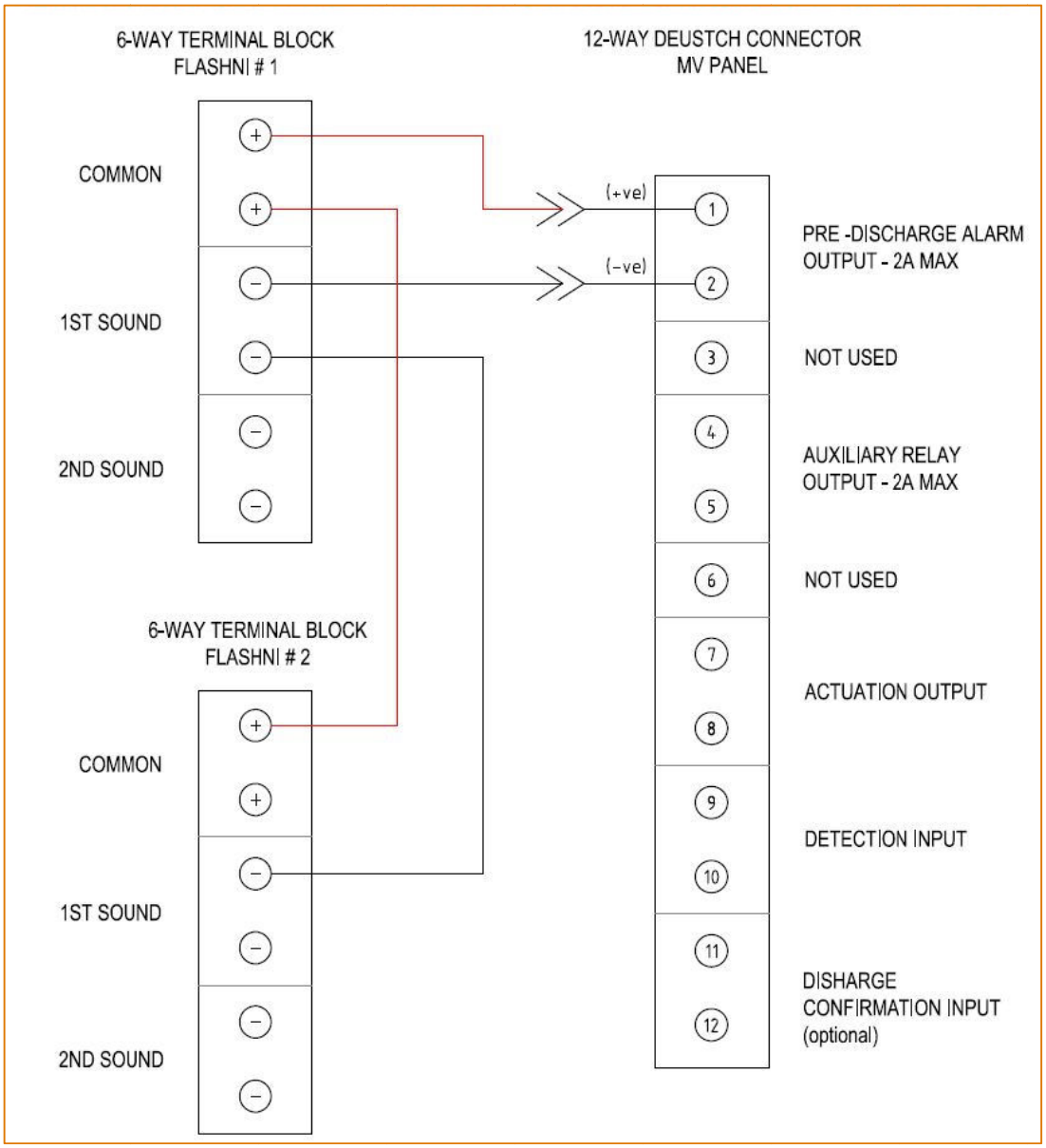

Figure 27: Flashni siren strobe wiring diagram

© 2018 Kidde Australia Pty Ltd

Marine system commissioning checklist

Kidde	**Commissioning checklist for Stat-X® marine system installations using an MV panel**	Stat-X®

Customer	
Vessel name	
Vessel model	

Item	Commissioning Item	✓ - Pass ✘ - Fail N/A	Comments
1	**System configuration as per design**		
2	**Warning signs or labels installed at entrance points to protected space**		
3	**Owner's manual supplied**		
4	**Stat-X® generators**:		
	a) Correct number of, size and type of generators installed		
	b) Correctly oriented and unobstructed		
	c) Undamaged and securely bracketed		
	d) Discharge seal intact		
	e) Area coverage and maximum installation height limits observed		
	f) Discharge clearance distance limits observed		
	g) Date of manufacture recorded		
5	**Mechanical release components**:		
	a) Accessible		
	b) Operating instructions in place		
	c) Undamaged and securely bracketed		
	d) Function tested		
6	**Electrical detection, alarm and actuation components**:		
	a) Manual release easily accessible		
	b) Operating Instructions in place		
	c) Fire detectors installed and function tested		
	d) Fire alarms (audible and visual) installed and function tested		

© 2018 Kidde Australia Pty Ltd

Item	Commissioning Item	✓ - Pass ✘ - Fail N/A	Comments
	e) Discharge circuit function tested		
	f) Pre-discharge alarms (audible and visual) installed and function tested		
	g) Fire-rated cabling used within the protected space		
	h) Cabling securely fastened		
	i) Electrical resistance of discharge circuit: i. Measure the resistance of the discharge cabling in the circuit, with the Stat-**X**® **generators disconnected**, and the ends of the wires at each generator location **connected together**. ii. Measure the resistance of **each** Stat-**X**® generator. **Note**: The electrical resistance reading for **each** Stat-**X**® generator should be between 1.4 and 2.0 ohm. iii. Connect **all** Stat-**X**® generators in the circuit and measure the **total resistance** of the circuit (cabling and Stat-**X**® generators). **Note**: The resistance measured in (**iii**) should **equal** the sum of the resistances measured in (**i**) and (**ii**). If they do **not** match **check** the discharge circuit wiring for faults.		
	j) Check discharge circuit resistance is **less** than **maximum** allowed: ▪ **< 8 ohm** for 12 V powered systems. ▪ **< 20** ohm for 24V powered systems.		
	k) Control panel function tested and clear of faults		

Comments	
Checked by	
Signature	
Date	

© 2018 Kidde Australia Pty Ltd

Stat-X® marine system commissioning report

Kidde	**Stat-X® marine system commissioning report**	Stat-X®

Customer			
Vessel make		**Vessel model**	
Vessel identification number or serial number		**Fire hazard locations being protected**	
Number of Stat-X® aerosol generators installed		**Stat-X® aerosol generator(s): date(s) of manufacture**	
		Pre-discharge delay period	
Stat-X® marine system installation commissioning checklist completed		☐ Yes	☐ No
Additional remarks			

Compartment Protected	Net Enclosure Volume (m^3)	Stat-X® Aerosol Generators Fitted		Application Density (grams/m^3)	Method of Actuation (✓)
		Number	Model		
					☐ Electrical ☐ Thermal ☐ Manual
					☐ Electrical ☐ Thermal ☐ Manual
					☐ Electrical ☐ Thermal ☐ Manual

© 2018 Kidde Australia Pty Ltd

	Stat-X® marine system commissioning report	

☐	**Commissioning checks of the system have been completed (✓)** **Refer to Stat-X® marine system installation commissioning checklist for details**

Commissioned by	
Signature	
Date	

Customer acknowledgement	
Customer	
Signature	
Date	

© 2018 Kidde Australia Pty Ltd

Service report

Kidde	**Service report**	Stat-X

Work order no.		**Date**	

Customer name		**Contact name**	
Customer address			
Telephone no.		**Mobile no.**	
Email address.			

Equipment type		**Equipment make**	
Equipment model		**Equipment s/n**	
Equipment location			

Stat-X® system type	☐ Vehicle	☐ Marine		
Generator model(s)			**Number of generators**	
Date(s) of manufacture				

Service schedule							
Servicing is to be conducted in **accordance** with the NSCV, relevant Australian Standard and manufacturers' manuals							
Item	**Service**	**Daily**	**6 Mthly**	**Yearly**	**Comments**	**Pass /Fail**	**Defects**
1	Manual actuators – Check						
2	Control panels – Check						
3	Manual actuators – Test						
4	Control panels –Test						
5	Labels – Check						
6	Stat-X® generators – Check						
7	Discharge circuit – Check						

© 2018 Kidde Australia Pty Ltd

Service schedule							
Servicing is to be conducted in **accordance** with the NSCV, relevant Australian Standard and manufacturers' manuals							
Item	**Service**	**Daily**	**6 Mthly**	**Yearly**	**Comments**	**Pass /Fail**	**Defects**
8	Detection system – Check						
9	Stat-**X**® generators – Check date						
10	Discharge circuit – Check & function test						
11	Detection system – Check						
12	System interface – Function test						

Record of all repairs

Record of parts used		
Does system meet original 'design specifications'?	☐ Yes	☐ No
If No, detail changes		

Name of technician		**Signature**	
Name of customer		**Signature**	
Date			

© 2018 Kidde Australia Pty Ltd

Feedback form

Your feedback …

We welcome your feedback regarding the **Marine vessel (MV) panel installation and maintenance manual.**
If you have any recommendations for improvement to this manual, please provide details using this form.
Send the completed form to Kidde Australia Pty Ltd – **email** to **Craig.Hafey@fs.utc.com**

About you …	
Name	
Organisation	
Organisation address	
Contact phone number	
Email address	

About this manual …						
Manual title	Marine vessel (MV) panel installation and maintenance manual					
Version number	Version 2.1					
How do you rate this manual? (circle response)	Excellent	Good	Fair	Poor	Complete	Incomplete
What type of feedback do you want to leave? (✓)	☐ Problem	☐ Question	☐ Suggestion	☐ Comment		

Your recommended changes to this manual …					
Page no.	**Paragraph no.** (from top of page)	**Paragraph line no.**	**Figure no.**	**Column no.**	**Recommended change and your reason(s)**

Office use only			
Receive date	**Action(s) required**	**Priority**	**Comments**

© 2018 Kidde Australia Pty Ltd