Stat-X fire suppression systems for vehicle and marine applications









Design, install, commission and maintenance manual

© 2018 Kidde Australia Pty Ltd

Version 2.12. July 188

About this manual

Kidde Australia Pty Ltd ("Kidde") assumes no responsibility for the application of any systems other than those addressed in this manual. The technical data contained herein is limited strictly for informational purposes only.

All information contained in this manual is based on the latest product information available at the time of preparation and Kidde reserves the right to make changes at any time without notice.

Kidde believes this data to be accurate, but it is published and presented without any guarantee or warranty. Kidde disclaims any liability for any use that may be made by the data and information contained herein by any party.

Important Systems **must only** be designed, installed, and commissioned by **technicians accredited** by Kidde.

No part of this manual may be reproduced, stored in a retrieval system, or transmitted in any form or by any means, electronic, mechanical, photocopying, or otherwise without the prior written approval of Kidde Australia Pty Ltd.

For further information, contact Kidde Australia Pty Ltd ACN 006 252 428:

- Telephone on: **1800 672 171**
- Internet at: **www.kidde.com.au**
- Technical support portal: **www.kidde.zendesk.com**

Stat-X® is a registered trademark. Manufactured in the USA and sold worldwide exclusively by Fireaway LLC under licence from Techno-TM, LLC

Revision

Revision	Notes
1.0	Initial release
2.0	New template Updated and added new graphics and images Included new Stat-X generator models Add heavy duty brackets for all generator types Removed old labels Updated parts list Changed description for the formula for generators required Removed tool list Included torque setting for E-type adaptors Added Maintenance Report Updated MSDS
2.1	Updated Figure 36, Page 59
2.2	Updated bracket descriptions, Page 20 Removed VS-MKII Panel

© 2018 Kidde Australia Pty Ltd

Contents

Stat-X® aerosol generators ---- 6

Stat-X® generators ---- 7

How Stat-X® works ---- 8

Features of Stat-X® aerosol generators ---- 9

Typical vehicle and marine applications ---- 10

Limitations of use ---- 11

Stat-X® fire suppression system components ---- 12

Electrically-operated Stat-X® generators ---- 13

- Electrical initiator parameters ---- 13
- Electrically-operated Stat-X® generators: part numbers and general specifications ---- 14
- Cable gland adaptors for electrically-operated Stat-X® generators ---- 14

Thermally-operated Stat-X® generators ---- 16

- Thermally-operated Stat-X® generator part numbers and general specifications ---- 16
- Thermal/Manual actuators ---- 17
- Manual actuators ---- 17
- Thermal/Manual and Manual actuator part numbers ---- 18
- Manual cable pulls ---- 19

Brackets ---- 20

Discharge confirmation (thermal) switch ---- 21

Warning and instruction labels ---- 22

Fire suppression control panels ---- 23

- Light vehicle panel ---- 23
- Marine vessel panel ---- 24

Detection components ---- 25

- Linear heat detection cable (LHD) ---- 25
- Smoke and thermal (point) detectors ---- 25

Vehicle fire suppression system design ---- 26

Fire risk assessments for vehicle fire suppression systems ---- 27

- Completing a risk assessment ---- 27
- Potential fuel sources ---- 28
- Potential ignition sources ---- 28
- Potential fire hazard locations ---- 29

Stat-X® vehicle fire suppression system design ---- 30

Stat-X® system design for engine compartment protection ---- 31

© 2018 Kidde Australia Pty Ltd

Engine compartment suppression system design ---- 32
Worked example: Stat-X® system design for engine compartment protection ---- 38
Calculations ---- 38

Marine fire suppression system design ---- 42

Commercial vessels ---- 43
Non-commercial vessels ---- 43
Stat-X® system design for marine machinery space protection ---- 44
Worked example: Stat-X® system design for marine machinery space protection ---- 50
Calculations ---- 51

Installation guidelines for Stat-X® fire suppression systems ---- 54

Installation guidelines for vehicle systems ---- 55
Installation guidelines for marine systems ---- 57
Installation of electrically-operated Stat-X® generators ---- 58
Installation of multiple generators ---- 60
Installation of a discharge confirmation (thermal) switch ---- 61
Stat-X® fire suppression system labels ---- 62
Warning labels ---- 62
Commissioning Stat-X® fire suppression systems ---- 63
Vehicle system commissioning ---- 63
Marine system commissioning ---- 63

Maintenance of Stat-X® fire suppression systems ---- 64

Routine service schedules ---- 66
Daily operator checks ---- 66
Six-monthly schedule ---- 66
Yearly schedule ---- 67
Service records ---- 67
Replacement of Stat-X® aerosol generators ---- 68
Post-discharge maintenance ---- 70
Recycling aerosol generators post discharge ---- 71

Safety and environmental information ---- 72

Toxicity and health information ---- 73
Interaction with fire ---- 73
Effects of exposure ---- 73

© 2018 Kidde Australia Pty Ltd

Material safety data sheet ---------- 74

Appendices ---------- 75

Vehicle system installation commissioning checklist ----------76
Vehicle system commissioning report ----------78
Marine system installation commissioning checklist ----------80
Marine system commissioning report----------82
Service report----------84

Stat-X® aerosol: toxicology test results ----------86
Stat-X® aerosol: material safety data sheet----------87
Feedback form ----------97

© 2018 Kidde Australia Pty Ltd

Stat-X® aerosol generators

This section contains information about:

— **Stat-X® generators**, see page **7.**
— **How Stat-X® works**, see page **8**.
— **Features of Stat-X® aerosol generators**, see page **9.**
— **Typical vehicle and marine applications**, see page **10.**
— **Limitations of use,** see page **11.**

© 2018 Kidde Australia Pty Ltd

Stat-X® generators

Each Stat-X® aerosol generator comprises a stainless steel housing that contains:

- the aerosol forming compound and an initiator element;
- an oxidation element;
- an insulating medium;
- a cooling element that cools the aerosol stream prior to discharge from the generator exit ports; and
- a non-permeable membrane to prevent ingress of moisture.

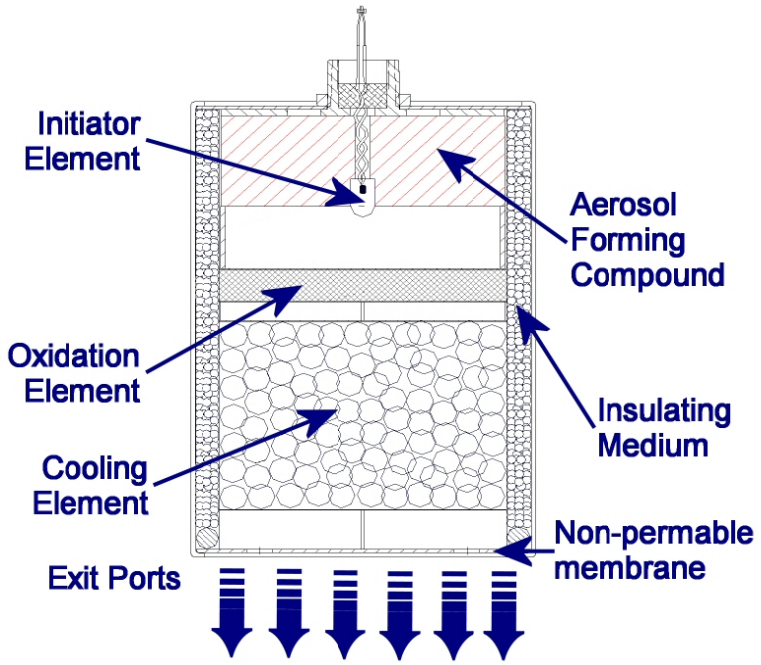

Figure 1: Cross-section view of a Stat-X® generator



Figure 2: Examples of Stat-X® generators

© 2018 Kidde Australia Pty Ltd

How Stat-X® works

Upon activation, Stat-X® aerosol generators discharge an ultra-fine (particle size less than two microns (2 μm)), potassium-based aerosol which is dispersed at low pressures (less than 350 kPa).

Fire suppression is primarily achieved through a chemical reaction between the ultra-fine aerosol particles and the free radicals (reactive atoms and molecules) that exist in the flames of a fire – it is this reaction that terminates the fire.

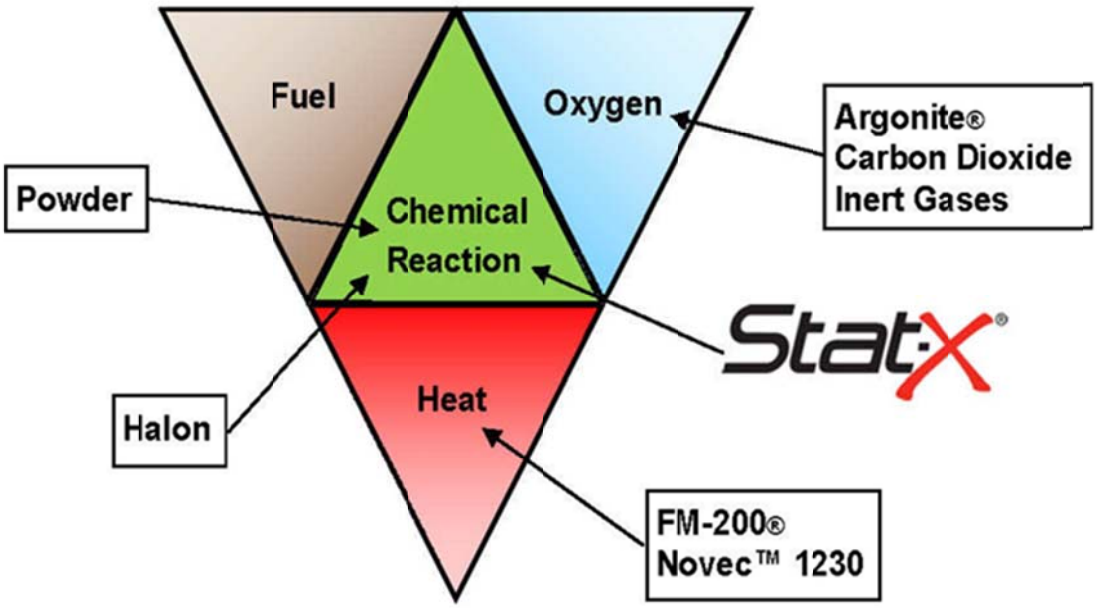

Figure 3: Primary extinguishing mechanism of Stat-X® aerosol compared to other extinguishing agents

© 2018 Kidde Australia Pty Ltd

Features of Stat-X® aerosol generators

Features of Stat-X® aerosol generators:

— Compact design that offers considerable weight and space savings compared to conventional fire suppression systems.

— Easy to install – no pressurised extinguishing agent containers or discharge pipework.

— Low maintenance – ten-year service life.

— High quality, rugged, stainless steel construction.

— Reduced post-fire downtime – no need to recharge pressurised extinguishing agent containers.

Features of Stat-X® aerosol:

— Highly effective – rapid suppression of class A and B fires.

— Minimal, post discharge clean-up.

  Stat-X® aerosol is buoyant and has a settling rate of approximately 50 cm per hour. Venting a protected space, within a reasonable timeframe following discharge, will dissipate most of the aerosol.

— Non-toxic – USA Environmental Protection Agency (EPA) approved for unoccupied and normally unoccupied areas.

— Environmentally friendly with:

  - Zero ozone depleting potential (ODP).
  - Zero global warming potential (GWP).

© 2018 Kidde Australia Pty Ltd

Typical vehicle and marine applications

Stat-X® fire suppression systems are suitable for the protection of:

— Commercial and recreational vehicle engine and machinery compartments, including mobile and transportable equipment used in the mining, construction, rail and defence industries, for example:

- Buses.
- Four wheel drives.
- Road haulage prime movers.
- Motor homes.
- Forklifts.
- Rail locomotives.



Figure 4: Stat-X® fire suppression systems installed in 4WD engine compartments

— Marine machinery spaces in:

- Commercial marine vessels, such as: fishing boats and passenger vessels.
- Pleasure craft, such as: cruisers and speedboats.



Figure 5: Stat-X® fire suppression systems installed in fishing vessel machinery spaces

© 2018 Kidde Australia Pty Ltd

Limitations of use

Stat-X® fire suppression systems are **not** suitable for use on:

— Deep-seated class A fires.

For example, a large build-up of dried out plant matter in harvesting machinery.

Note For deep-seated class A fires it would be more appropriate to use a water-based agent, such as, used in pre-engineered foam spray suppression system.

— Class D metal fires.

For example: sodium, aluminium, magnesium or potassium.

— Substances that burn without oxygen.

For example: phosphorous or thermites (mixture of a fuel and an oxidiser, such as, aluminium and iron (III) oxide).

— High-voltage class E fires that occur in electrical equipment operating at above 40,000 volts.

© 2018 Kidde Australia Pty Ltd

Stat-X® fire suppression system components

This section contains information about:

— **Electrically-operated Stat-X® generators,** see page **13.**
— **Thermally-operated Stat-X® generators**, see page **16.**
— **Brackets**, see page **20**.
— **Discharge confirmation (thermal) switch**, see page **21**.
— **Warning and instruction labels**, see page **22**.
— **Fire suppression control panels**, see page **23**.
— **Detection components**, see page **25**.

© 2018 Kidde Australia Pty Ltd

Electrically-operated Stat-X® generators

Electrically-operated Stat-X® generators are actuated using an electrical initiator which is incorporated inside the generator casing. This electrical initiator is connected to an electrical circuit via a two-wire connector.



Figure 6: Electrically-operated Stat-X® generators

Electrical initiator parameters

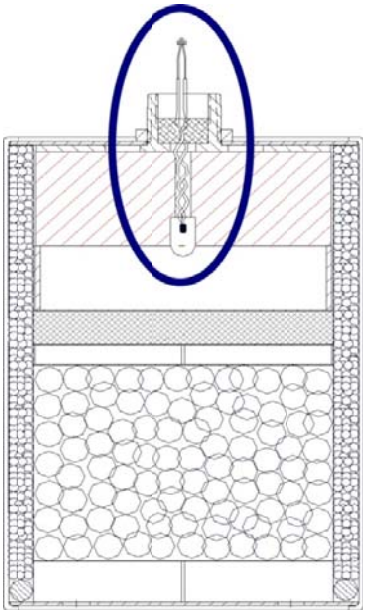

Figure 7: Stat-X® electrical initiator

The electrical parameters of the initiator are:

Electrical Parameters	Values
Resistance	1.4 to 2.0 ohms
Minimum series circuit firing current	1.0 ampere for 0.050 seconds
Specified maximum test current	≤ 0.025 ampere
Specified maximum supervisory current	≤.005 ampere

Table 1: Initiator electrical parameters

© 2018 Kidde Australia Pty Ltd

Electrically-operated Stat-X® generators: part numbers and general specifications

Part numbers and general specifications for electrically-operated Stat-X® generator are listed in the table below.

Electrically-operated Stat-X® Generators						
Part Number	Model	Mass of Aerosol-forming Compound (g)	Ship Weight per Unit Packaging (kg)	Length (mm)	Diameter (mm)	Discharge Time (s)
129984	**30E**	30	0.36	109	51	7
129985	**60E**	60	0.48	130	51	10
129985L	**60E Long**	60	0.55	155	51	10
129986	**100E**	100	1.44	121	76	12
129987	**250E**	250	2.72	150	127	12
129988	**500E**	500	3.63	180	127	23
129989	**1000E**	1000	7.05	170	203	16
129990	**1500E**	1500	8.60	203	203	23
129991	**2500E**	2500	11.33	267	203	36

Table 2: Stat-X® Electrical generator part numbers and specifications

Cable gland adaptors for electrically-operated Stat-X® generators

Electrically-operated Stat-X® generators have a ¾" NPT thread threaded fitting on the end of the generator. The table on page **15** details adaptors available to convert this thread to metric threads suitable for use with M20 or PG9 cable glands.



Figure 8: Cable gland and adaptor fitted to a Stat-X® aerosol generator

© 2018 Kidde Australia Pty Ltd

Electrically-operated Stat-X® Generators: Adaptors		
Part	**Part Number**	**Description**
	**130166**	¾" NPT – M20 cable gland adaptor – suits FR cable (includes plastic gland)
	**132649**	¾" NPT – ¾" BSP stainless steel elbow
	132648	¾" BSP – ½" BSP reducing bush – suits M20 cable gland
	**CGM20**	Cable Gland, metal M20 – suits FR cable
	**136053**	3/4" NPT – suits PG9 cable gland adaptor
	**075-077**	PG9 Metal cable gland – suits GKW cable

Table 3: Adaptors for E-type Stat-X® generators

© 2018 Kidde Australia Pty Ltd

Thermally-operated Stat-X® generators

Thermally-operated Stat-X® generators may be fitted with Thermal/Manual or Manual actuators:

— **Thermal/Manual** – combines automatic operation, without the need for an external power source, with a manual pull pin for manual operation.

— **Manual** – pull pin for manual operation.



Figure 9: Stat-X® aerosol Thermal generators fitted with 'Thermal/Manual actuators'



Figure 10: Stat-X® aerosol Thermal generator fitted with a 'manual actuator'

Thermally-operated Stat-X® generators incorporate a priming cap which is used to initiate the discharge of the generator. The priming cap is activated when the firing pin of either a Thermal/Manual or Thermal actuator is released.

Thermally-operated Stat-X® generator part numbers and general specifications

Part numbers and general specifications for thermally-operated Stat-X® generators are listed in the table below.

Thermally-operated Stat-X® Generators						
Part Number	Model	Mass of Aerosol-forming Compound (g)	Ship Weight per Unit Packaging (kg)	Length (mm)	Diameter (mm)	Discharge Time (s)
129997	**30T**	30	0.26	109	51	8
129998L	**60T Long**	60	0.55	155	51	8.5
129999	**100T**	100	1.44	152	76	11.5
130000	**250T**	250	2.72	168	127	12
130000L	**250MT**	250	1.87	202	76	18
130001	**500T**	500	3.63	218	127	21
140000	**1000MT**	1000	5.6	333	127	25

Table 4: Stat-X® Thermal generator part numbers and specifications

© 2018 Kidde Australia Pty Ltd

Thermal/Manual actuators

Thermal/Manual actuators:

- Have a firing pin which is held in place by solder which is designed to melt at a specific temperature. When the melting temperature of the solder is reached, the firing pin is released.
- Are available with three different activation temperatures: 70°C, 95°C and 123°C.
- Are manufactured from C48500 naval brass.
- Incorporate a manual pin pull – with horizontal and vertical pull pin options.



Figure 11: Stat-X® generator fitted with a Thermal and Manual actuator

Manual actuators

Manual actuators:

- Have a firing pin which is held in place by a pull-pin. When the pull-pin is removed, the firing pin is released.

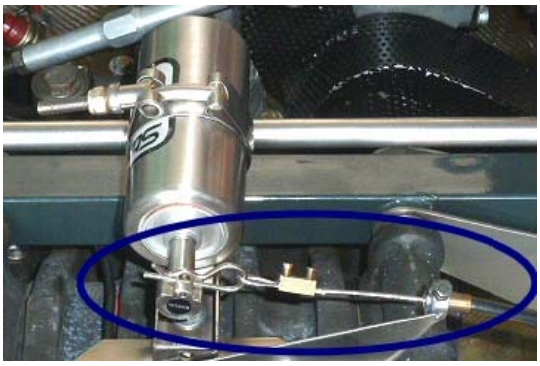

Figure 12: Stat-X® generator fitted with a Manual actuator and cable pull

- Are available with horizontal and vertical pull-pin options.

© 2018 Kidde Australia Pty Ltd

— Have a **MANUAL** black label fixed to the top of the initiator and an **M** stamped on one side.



Figure 13: Manual actuator markings

Thermal/Manual and Manual actuator part numbers

Part numbers for **Thermal/Manual** and **Manual** actuators are listed in the table below.

Stat-X® Thermal/Manual and Manual Actuators	
Part Number	**Description**
130006	Manual only vertical pull
130007	Manual only horizontal pull
132161	Thermal/manual 70°C horizontal pull
132162	Thermal/manual 70°C vertical pull
132163	Thermal/manual 95°C horizontal pull
132164	Thermal/manual 95°C vertical pull
132165	Thermal/manual 123°C horizontal pull
132166	Thermal/manual 123°C vertical pull

Table 5: Part numbers for Thermal/Manual actuators

© 2018 Kidde Australia Pty Ltd

Manual cable pulls

Manual cable pull assemblies (1, 3 and 6 metre lengths) consisting of a red t-bar pull handle and stainless steel cable are available for use with Stat-X® thermal/manual and manual actuators.

The cable assemblies comprise a stainless steel cable, cable crimp, cable sheath, sheath end fitting and L-bracket. If required, the cable assemblies can be cut down to a shorter length.



Figure 14: Manual cable pull assemblies

Stat-X® Manual Cable Pulls	
Part Number	**Description**
135982	Cable manual release kit 1 metre
13983	Cable manual release kit 3 metre
13984	Cable manual release kit 6 metre

Table 6: Part numbers for cable pulls

© 2018 Kidde Australia Pty Ltd

Brackets

Part numbers for Stat-X® aerosol generator brackets are listed in the table below.

Stat-X® Generator Brackets		
Part	**Part Number**	**Description**
	**129993**	Vehicle bracket for **30**/**60**
	**136186**	Vehicle bracket for **30**/**60** (Heavy Duty)
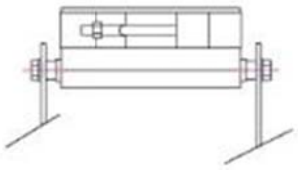	**132844**	Vehicle bracket for **100** (Heavy Duty)
	**130396**	Vehicle bracket for **250**/**500** (Heavy Duty)
	130397	Vehicle Bracket for **1000E/1500E/2500E** (Heavy Duty)

Table 7: Part numbers for generator brackets

© 2018 Kidde Australia Pty Ltd

Discharge confirmation (thermal) switch

A discharge confirmation (thermal) switch (Part No. **130423**) can be mounted on a Stat-X® aerosol generator body to provide discharge confirmation. The switch contacts open when the temperature of the generator body exceeds a set temperature.



Figure 15: Thermal switch – normally closed (Part No. 130423) Discharge confirmation (thermal) switch

For ease of installation, a thermal switch kit is available (Part No. **001-930**). The kit contains:

1. Thermal switch with a 300 mm fly lead encased in a protective flame-retardant heat shrink.
2. A brass enclosure with connector block for connecting the fly lead to the discharge confirmation circuit.

Stat-X® Thermal Switch Kit		
Part	**Part Number**	**Kit Contents**
	**001-930**	Thermal switch with 300 mm fly lead and connector
	**130423**	Thermal Switch (bare)

Table 8: Part numbers for thermal switches

Note The thermal switch is a single use component and must be replaced after a discharge.

© 2018 Kidde Australia Pty Ltd

Warning and instruction labels

A variety of warning and instruction labels are available to suit a range of applications.

Part numbers are listed in the table below.

Warning and Instruction Labels		
Part	**Part Number**	**Use**
	**66547**	Fitted to all entrances to a protected compartment. (Refer to AS4487 for more information).
	**66548**	Fitted to all entrances to a protected compartment with a detection and alarm system (Refer to AS4487 for more information).
	**66549**	Fitted to access points or inside compartments protected with an automatically operated system. (Refer to AS4487 for more information).

Table 9: Part numbers for labels

© 2018 Kidde Australia Pty Ltd

Fire suppression control panels

Three fire suppression control panels are available to cater for a range of vehicle and marine applications:

- **Light vehicle panel,** see page **23.**
- **Marine vessel panel,** see page **24.**

Light vehicle panel

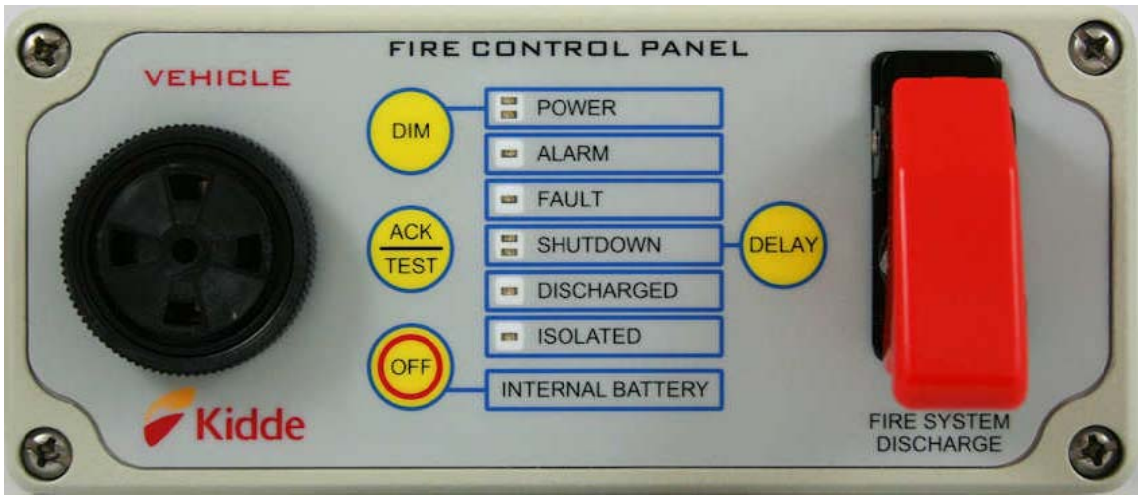

Figure 16: Light vehicle panel

The light vehicle (LV) panel (Part No. **001-926**) has been designed and tested to meet the requirements of AS 5062, *Fire protection of mobile and transportable equipment*. It incorporates visual and audible alarms and manual controls in a single, weatherproof enclosure and is suited for use in small vehicles, such as, four wheel drive (4WD), forklifts, generator sets and other mobile equipment.

For detailed information on the specifications, operation and configuration options of the LV panel refer to the *Light vehicle (LV) panel installation and maintenance manual*.

© 2018 Kidde Australia Pty Ltd

Marine vessel panel

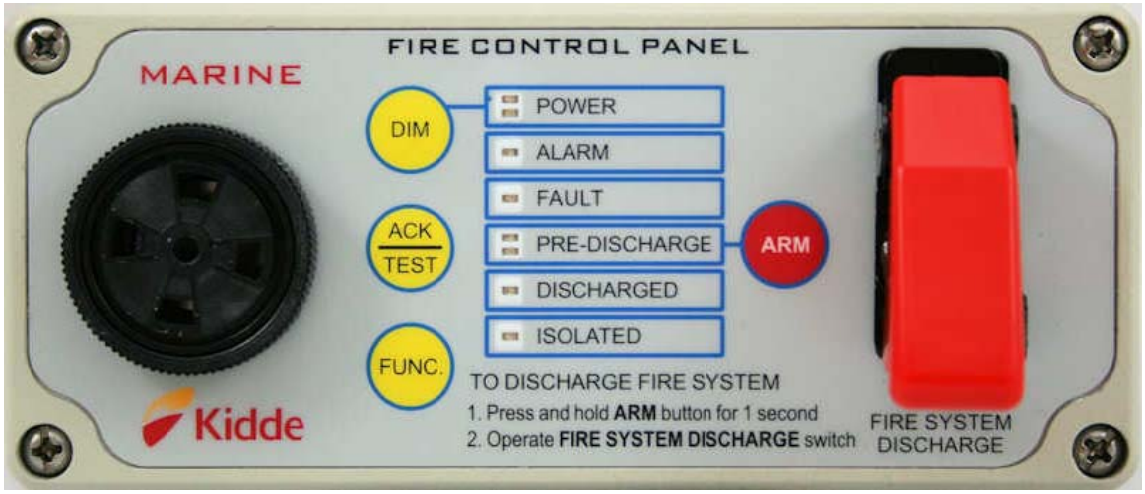

Figure 17: Marine vessel panel

The marine vessel (MV) panel (Part No. **001-927**) has been designed to meet the requirements of the *National Standard for Commercial Vessels (NSCV) part C design and construction, section 4 fire safety*. It has also been tested to the requirements of AS 5062, *Fire protection of mobile and transportable equipment*.

It incorporates visual and audible alarms and manual controls in a single, weatherproof enclosure and is suitable for use in commercial vessels built to comply with NSCV requirements, as well as, for use in private pleasure craft.

Note Automatic discharge of fire suppression systems is **not** permitted on commercial vessels and the MV panel has been designed to comply with this requirement – the MV panel does **not** support automatic discharge of the suppression system.

Owners of private pleasure craft **may** wish to have a fully automatic fire detection and suppression system installed to provide protection to the vessel even when it is unmanned. This is **permissible for private pleasure craft**, and in such cases, a LV panel could be used instead of a MV panel.

For detailed information on the specifications, operation and configuration options of the MV panel refer to the *Marine vessel (MV) panel installation and maintenance manual*.

© 2018 Kidde Australia Pty Ltd

Detection components

A range of detection devices are available depending upon the application, and the control panel being used.

To select a thermally operated detector, with a suitable alarm temperature setting, it is recommended that a temperature survey of the hazard area be conducted. There is a range of temperature loggers and indicators on the market which can be used to carry out the survey.

The table details temperature indicating stickers suitable for various temperature ranges. The stickers have a temperature scale and irreversibly change colour to indicate the maximum temperature they have been exposed to.

Temperature Indicating Stickers		
Part	Part Number	Temperature Range
 (pack of 10 stickers)	**136003**	40 – 71°C
	136004	77 – 116°C
	136007	121 – 160°C
	136005	166 – 204°C
	136006	210 – 260°C

Table 10: Part numbers for temperature indicating stickers

Linear heat detection cable (LHD)

Linear heat detection (LHD) cable is most commonly used for fire detection in vehicles. LHD cables consist of two insulated conductors twisted together and sheathed in a coloured PVC outer casing.

LHD cables sense a fire, when heated to temperatures **above** its **alarm temperature**, anywhere along the length of the cable. When heated above its alarm temperature, the insulation around the two conductors melts and the conductors touch and create a short circuit that initiates a fire alarm.

Smoke and thermal (point) detectors

Marine systems will most commonly use point type optical smoke and thermal detectors although LHD cable may also be used.

Refer to the *Marine vessel (MV) panel installation and maintenance manual* or the *Light vehicle (LV) panel installation and maintenance manual* or the *VS-MKII Control System: installation, operation and maintenance manual* for more detailed information and part numbers for detectors and related components.

© 2018 Kidde Australia Pty Ltd

Vehicle fire suppression system design

Vehicle fire suppression system design includes information about:

— **Fire risk assessments for vehicle fire suppression systems**, see page **27.**
— **Stat-X® vehicle fire suppression system design,** see page **30.**
— **Stat-X® system design for engine compartment protection,** see page **31**.
— **Engine compartment suppression system design**, see page **32.**
— **Worked example: Stat-X® system design for engine compartment protection,** see page **38.**

© 2018 Kidde Australia Pty Ltd

Fire risk assessments for vehicle fire suppression systems

Australian Standard AS 5062, *Fire protection for mobile and transportable equipment* requires a risk assessment be completed as part of the fire risk management process for every vehicle fire suppression system design.

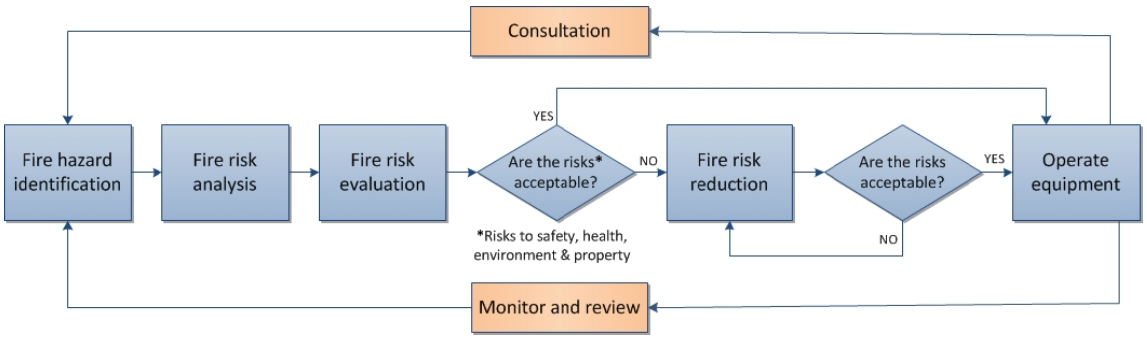

Figure 18: Fire risk management process

The information obtained in conducting the **fire risk assessment** is used to determine the fire hazard areas that are to be protected by the fire system.

Each **fire risk assessment** must be completed with information made available by the client and other relevant stakeholders and **assumes** that critical risk reduction measures, such as, good housekeeping and regular machine maintenance are in place.

Completing a risk assessment

The first step in the **fire risk assessment** process is to identify potential fire hazards. A fire hazard exists where there is the potential for the interaction of fuel sources, oxygen and ignition sources. Potential fuel and ignition sources must be identified to determine the fire hazard locations.

© 2018 Kidde Australia Pty Ltd

Potential fuel sources

Potential fuel sources which need to be considered include:

- Flammable liquids and lubricants used to process or transport a product.
- The nature of a product being processed or transported.
- Materials found in the surrounding environment.

Potential sources of fuels may include materials associated with the following classes of fire:

Class of fire	Potential sources of fuel
Class A (carbon-based material fires)	Wood, rags, paper, rubber, coal, vegetation or flammable dusts.
Class B (flammable liquid fires)	Diesel, petrol, hydraulic fluids, grease, solvents, paints, varnishes, lacquers and oils.
Class C (flammable gas fires)	LPG, natural gas, methane, butane, propane and hydrogen.
Class D (metals)	Magnesium, aluminium and their alloys.
Class E (electrically-energised equipment fires)	Fires involving electrically-energised equipment and fuels of any other class of fire.

Table 11: Examples of potential fuel sources

Potential ignition sources

Potential ignition sources which need to be considered include:

Potential ignition sources	Examples
Heat energy	High temperatures and hot surfaces are usually found in the vicinity of internal combustion engines. For example: – exhaust systems – pumps and turbochargers – heat exchangers – bearings and brakes.
Electrical energy	Electrical energy found in various electrical components. For example: – switch gear – motors and retarders – transformers and batteries – lights and cables – short circuits.
Mechanical energy	Mechanical energy created by friction and overheating.
Chemical reaction	Chemical reactions, such as, self-heating, self-ignition and exothermic reactions (releases heat energy).

Table 12: Examples of potential ignition sources

© 2018 Kidde Australia Pty Ltd

Potential fire hazard locations

A fire hazard exists where there is the **possibility** of a reaction between oxygen and sources of ignition and fuel.

Typical fire hazard locations identified, as a result of the risk assessment, can include:

- Turbo chargers and exhaust systems.
- Engine fuel lines including piping, hoses, pumps, valves and injectors.

  Note Flammable liquids which are released under pressure, present a **higher fire risk**, as they can be more easily ignited when atomised.
- Engine valleys.
- Flexible hydraulics lines used on hydraulic pumps and on hydraulics within vehicle engine compartments and equipment enclosures, and marine machinery spaces.
- Hydraulic oil cooler fans.

When assessing potential fire hazards locations, remember that flammable liquids, (including high flashpoint fuels, such as, diesel or oil) which are discharged under pressure, present a higher fire risk as they can be more easily ignited.

Fire incident experience

Previous fire experience on similar vehicles and machinery should be considered in a **fire risk assessment** – it can indicate that special hazards exist, such as:

- Hydraulic hose that frequently wears or comes loose at a specific connection point.
- Equipment or components that have an adverse fire history.
- Other failures that increase the potential for fire.

Input from the vehicle manufacturer, service provider or operator is often essential.

© 2018 Kidde Australia Pty Ltd

Stat-X® vehicle fire suppression system design

A **fire risk assessment** for the equipment and compartment space to be protected must be completed **prior** to undertaking a detailed Stat-X® vehicle fire suppression system design.

Stat-X® fire suppression systems are fitted to vehicles as part of a fire risk reduction strategy. As such, the system is designed to only suppress fires that occur in specified risk areas.

For a Stat-X® fire suppression system to be effective, the compartment space being protected, such as an engine compartment, must be relatively well enclosed on the sides and the top to retain the discharged Stat-X® aerosol.

Once a **fire risk assessment** has been completed, there are **seven steps** that need to be completed when designing a Stat-X® vehicle fire suppression system. These steps are summarised in the design process chart on page **31.**

© 2018 Kidde Australia Pty Ltd

Stat-X® system design for engine compartment protection

The design process for the protection of a vehicle engine compartment using a Stat-X® fire suppression system is summarised in the following chart. A more detailed explanation of each of the steps is provided in the following pages.

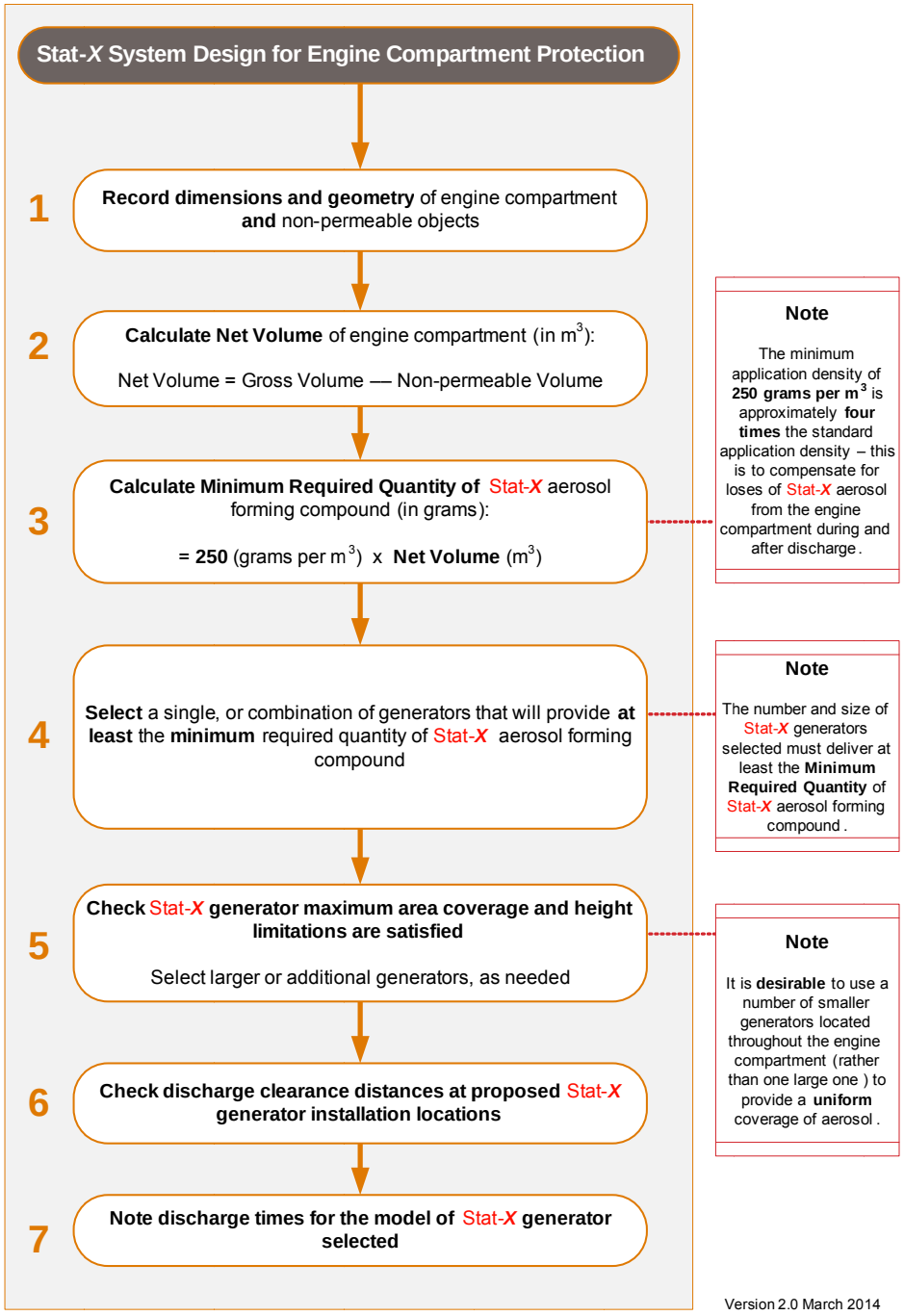

Figure 19: Stat-X® system design for engine compartment protection

© 2018 Kidde Australia Pty Ltd

Engine compartment suppression system design

Step 1: Record dimensions and geometry of engine compartment and non-permeable objects

a) Record engine compartment dimensions and geometry in sufficient detail to enable the **net volume** of the engine compartment to be calculated.

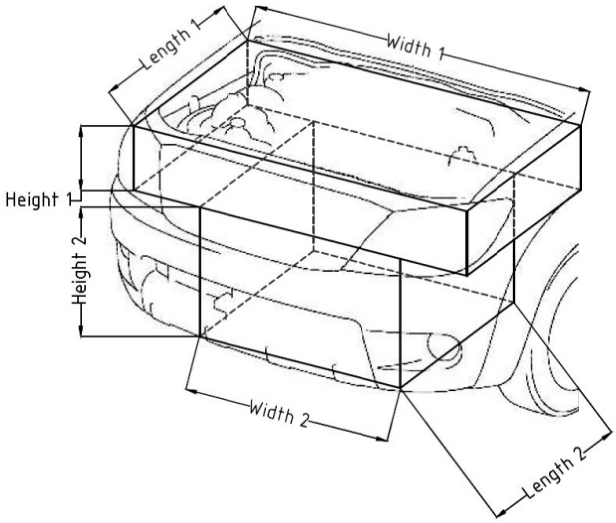

Figure 20: Example of engine compartment geometry

As engine compartments are irregular in shape – it may be easier to calculate the **gross volume** of an engine compartment volume by breaking it into a number of smaller rectangular volumes.

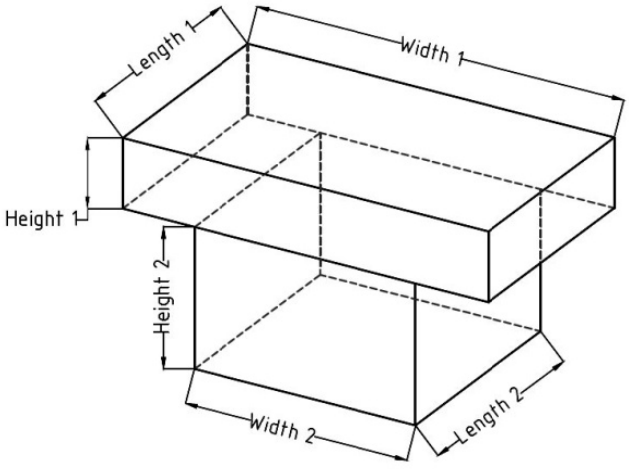

Figure 21: Breaking engine compartment volume into a number of smaller rectangular volumes

© 2018 Kidde Australia Pty Ltd

b) Record dimensions and geometry of any large, non-permeable equipment, such as, the engine block or transmission, within the engine compartment in sufficient detail to enable the volume of each object to be calculated.

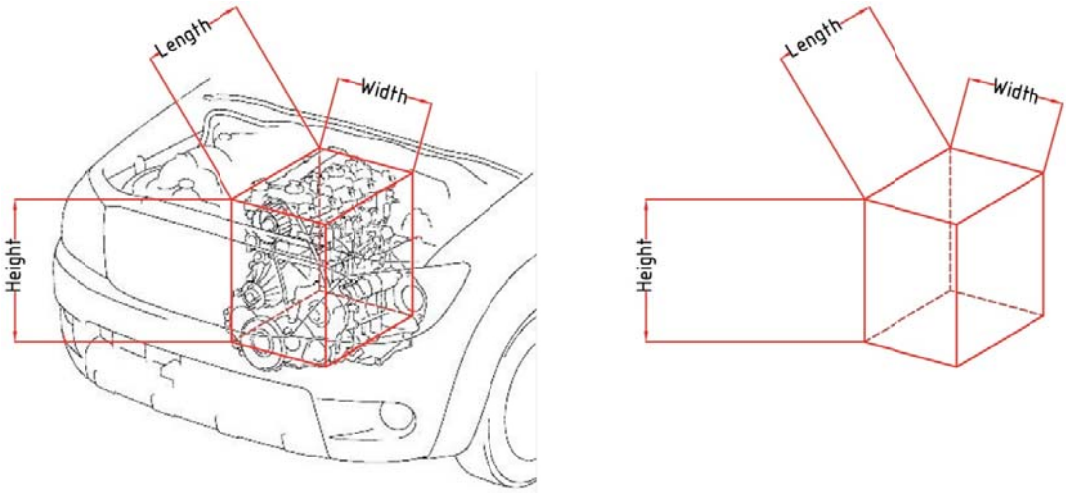

Figure 22: Example of an assumed rectangular volume used to calculate the volume of a non-permeable object

Step 2: Calculate the net volume of the engine compartment

a) Calculate the **gross volume** in cubic metres (m^3).

b) Calculate the **total non-permeable volume** in cubic metres (m^3).

To calculate the volume of objects, such as, engines or transmissions, record the dimensions of an assumed rectangular volume which approximates the total volume of each **non-permeable** object.

Add individual the non-permeable volumes together to determine the **total non-permeable volume** in cubic metres (m^3).

Important Do **not** include the volume of any objects that will melt **or** be destroyed in a fire, as non-permeable objects. For example: do **not** include air filter boxes or batteries.

c) Calculate the **net volume** of the engine compartment in cubic metres (m^3) using the following formula.

Net volume (m^3) = Gross volume (m^3) — Non-permeable volume (m^3)

© 2018 Kidde Australia Pty Ltd

Step 3: Calculate the minimum required quantity of Stat-X® aerosol forming compound

The **minimum application density** of Stat-**X**® for engine compartment protection:

— Is **250 grams per cubic metre** (g/m^3), and applies to the **net volume** of the engine compartment or space in cubic metres (m^3).

— Can be reduced to a **minimum** of **62** (g/m^3), where an engine compartment:

- is **completely enclosed**;
- there is **no airflow** during or after the aerosol discharge; **and**
- ventilation or cooling systems are shut down **before** discharge.

Important If **unsure** as to which application density to use, **check** with Kidde to confirm which application density is **appropriate** for your application.

a) Use the following formula to calculate the **minimum required quantity** of Stat-**X**® aerosol forming compound.

Minimum Required *Stat-X*® Quantity (g) = 250 (g/m^3) X Net volume (m^3)

Step 4: Determine the size and number of Stat-X® aerosol generators required

a) Select a single, or combination of generators that will provide **at least** the **minimum** required quantity of Stat-X® aerosol forming compound.

Note It is permissible to use **different** size generators to provide the **minimum** required quantity of Stat-X®.

b) If using a **single** generator size, the following formula can be used.

$$N = M \div m$$

Where:

N is the **number** of Stat-**X**® aerosol generators required.

M is the minimum required quantity (in grams) of Stat-**X**®.

m is the mass of Stat-**X**® in each generator (in grams).

© 2018 Kidde Australia Pty Ltd

For example, a 60 E Stat-**X**® generator contains 60 grams of aerosol forming compound, so in this case, **m** would equal 60.

Important

Additional factors, such as, physical size of the generators, discharge clearance distances, maximum coverage areas, height limitations, and discharge times need to be considered **before** finalising the number and size of generators to be installed.

Step 5: Check maximum area coverage and height limitations are satisfied

Maximum area coverage and height limitations for **electrically** and **manually operated** Stat-**X**® generators are listed in the table below.

Maximum area coverage and height limitations for electrically and manually operated Stat-X® generators		
Model	**Maximum area coverage (m x m)**	**Maximum installation height (m)**
30 E	1.20 x 1.20	1.20
60 E	1.70 x 1.70	2.00
100 E	2.18 x 2.18	2.50
250 E	3.45 x 3.45	2.75
500 E	4.88 x 4.88	3.50
1000 E	4.88 x 4.88	5.00
1500 E	4.88 x 4.88	5.00
2500 E	4.88 x 4.88	5.00

Table 13: Electrical and manual generator coverage limitations

If a **thermally-operated** Stat-**X**® generator is being used to protect an engine compartment, the permissible area coverage and installation height limits are as per the table below

Maximum area coverage and height limitations for thermally-operated Stat-X® generators		
Model	**Maximum area coverage (m^2)**	**Maximum installation height (m)**
30 T	0.50	1.00
60 T	0.60	1.80
100 T	0.92	1.80
250 T	2.13	2.00
500 T	3.72	2.50

Table 14: Thermal generator coverage limitations

Note

If installing thermally-operated Stat-**X**® generators, **only one** is permitted **per engine compartment**.

The generator should be installed near a vent (if applicable) at or near the top of the compartment where hot air will flow over the thermal actuator.

Do **not** install in corners where there is likely to be little air movement.

© 2018 Kidde Australia Pty Ltd

Uniform distribution of Stat-X® aerosol

Although a **single** Stat-**X**® generator may be sufficient to provide the required **minimum application density** of aerosol, in congested compartments, it is preferable to use **a number of smaller generators** to provide more uniform distribution of aerosol. Ideally, in congested compartments, at least one Stat-**X**® generator should be positioned on **either** side of the engine.

Step 6: Check discharge clearance at proposed generator installation locations

Stat-**X**® generators should be installed at locations where the **discharge clearance** is as long as possible. Aerosol particles tend to agglomerate (bind together into a solid mass) on any surfaces **within** the *specified* **discharge clearance** – this **reduces** the actual amount of aerosol delivered to fight the fire.

For similar reasons, generators must not be aimed to discharge directly at each other.

Generators should also only be aimed to discharge towards non-thermally sensitive components. It is preferable to mount each generator so that they are aimed to discharge horizontally towards to the engine block.

The minimum **discharge clearance** required for **engine compartment** applications are listed in the table below.

Stat-X® Generator Size	Minimum Discharge Clearance(m)
30 gram	**0.12**
60 gram	**0.15**
100 gram	**0.20**
250 gram	**0.30**
500 gram	**0.50**
1000 gram	**0.80**
1500 gram	**1.50**
2500 gram	**1.50**

Table 15: Generator discharge clearances

© 2018 Kidde Australia Pty Ltd

Note The discharge clearance specified in the table on page 36 are for engine compartments and machinery space applications **only** and are **shorter** than the discharge clearances specified for **clean** applications, such as switch rooms where it is essential that the discharge is as clean as possible.

For these types of applications, **longer** discharge clearances, than those specified above, **must** be used. Contact Kidde for details.

Typically, either 30 gram or 60 gram Stat-**X**® aerosol generators are the most appropriate size for small, congested engine compartments, as it may not be possible, to achieve the **discharge clearance** required for the larger Stat-**X**® generators.

Step 7: Note the discharge time for the model of Stat-X® aerosol generator selected

It is preferred to select Stat-**X**® generators that give as **long a discharge time** as possible, provided other installation constraints, most importantly the **discharge clearance**, can be achieved.

Discharge times for Stat-X® aerosol generators			
Size	**Discharge time (s)**	**Model**	**Discharge time (s)**
30 gram	7.0	**500 gram**	23.0
60 gram	10.0	**1000 gram**	16.0
100 gram	12.0	**1500 gram**	23.0
250 gram	12.0	**2500 gram**	36.0

Table 16: Discharge times

Selecting the preferred Stat-X® aerosol generator configuration

The actual number of generators selected must satisfy **each** of the steps **3** to **6**, as detailed in the engine compartment suppression system design process:

— Select the **best option** (paying consideration to cost, practicality etc.) that satisfies the criteria required for each step of the design process.

— In most small engine compartments, the **only size** Stat-**X**® aerosol generators that can practically be installed are the **30 gram** and **60 gram** sizes.

© 2018 Kidde Australia Pty Ltd

Worked example: Stat-X® system design for engine compartment protection

As an example, consider the engine compartment of a small 4WD vehicle. The dimensions were measured and the results recorded as per the diagrams and table below.

Calculations

Worked example: Stat-X® system design for engine compartment protection	
	Calculations
Step 1	**Record dimensions and geometry** of engine compartment and non-permeable objects. The dimensions were measured and the results recorded as per the diagrams and table below. Note In this example, there are **no other** solid objects to deduct from the net volume calculation **other** than the engine block.

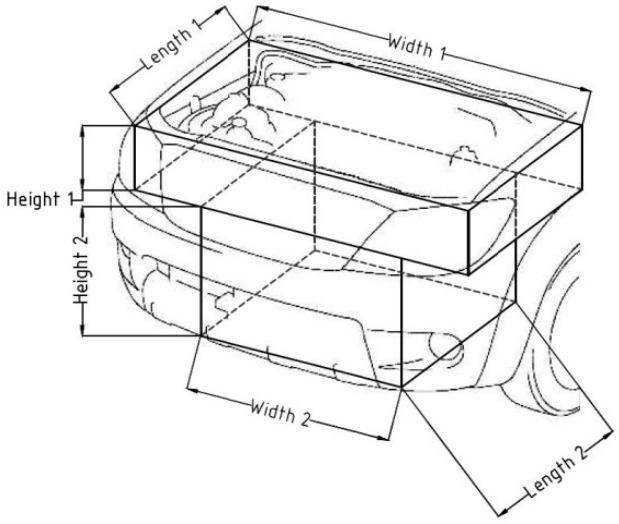

Figure 23: Engine compartment dimensions

Width (m)	Length (m)	Height (m)
Width 1 (W_1) = 1.45 m	**Length 1** (L_1) = 0.75 m	**Height 1** (H_1) = 0.15 m
Width 2 (W_2) = 0.85 m	**Length 2** (L_2) = 0.75 m	**Height 2** (H_2) = 0.45 m

© 2018 Kidde Australia Pty Ltd

Worked example: Stat-X® system design for engine compartment protection	
	Calculations

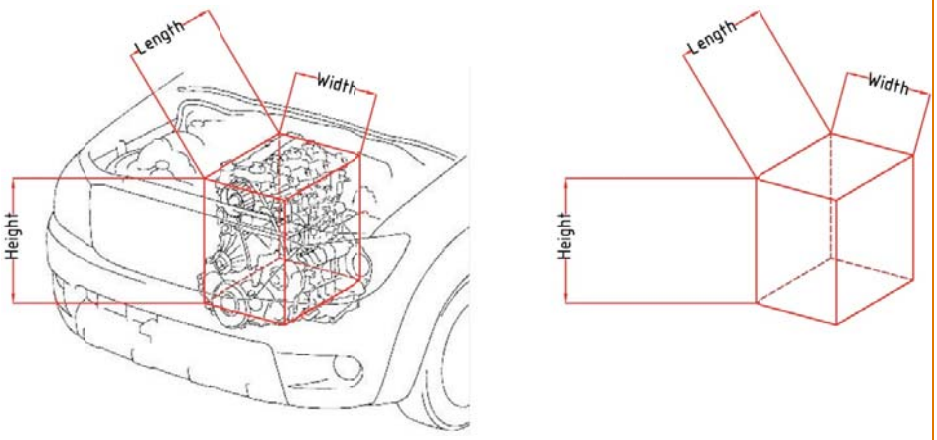

Figure 24: Engine – dimensions of rectangular volume which approximates the engine volume

Width (m)	Length (m)	Height (m)
Width = 0.35 m	**Length** = 0.45 m	**Height** = 0.60 m

Step 2

Calculate the **net volume** of the engine compartment.

a) Calculate the **gross volume** in cubic metres (m^3).

Calculate the **gross volume** of the engine compartment volume by using two rectangular volumes:

- **Rectangular volume 1** – between the top of the wheel arches and the bonnet line, and
- **Rectangular volume 2** – between the wheel arches.

Note Rounding of numbers is acceptable. It is easier to work with values with **two** decimal places.

Gross volume (m^3)	**= rectangular vol. 1 + = W_1 x L_1 x H_1 = 1.45 x 0.75 x 0.15 = 0.16 m^3**	**= rectangular vol. 2 = W_2 x L_2 x H_2 = 0.85 x 0.75 x 0.45 = 0.29 m^3**
Gross volume (m^3)	**= 0.45 m^3**	

b) Calculate the **total non-permeable volume** in cubic metres (m^3).

Non-permeable volume (m^3)	**= Width x Length x Height = 0.35 x 0.45 x 0.60 = 0.10 m^3**

c) Calculate the **net volume** of the engine compartment in cubic metres (m^3).

Net volume (m^3)	**= Gross volume — Non-permeable volume = 0.45 — 0.10 = 0.35 m^3**

© 2018 Kidde Australia Pty Ltd

Worked example: Stat-X® system design for engine compartment protection	
	Calculations
Step 3	Calculate the **minimum required quantity** of Stat-**X**® aerosol forming compound. As this example is for a 4WD engine compartment which is open on the bottom the appropriate application density is **250 grams per cubic metre** (g/m^3). **Minimum Stat-X® quantity** (g) = **250** (g/m^3) X **Net volume** (m^3) = 250 x 0.35 = 88 grams
Step 4	Determine the **size** and **number** of Stat-**X**® generators **required**. Select a single, or combination of generators that will provide **at least** the **minimum** required quantity of Stat-**X**® aerosol forming compound. In this example, a minimum of 88 grams of Stat-**X**® is required, so options that could be considered include: **a)** 1 x 100 gram generator. **b)** 1 x 60 plus 1 x 30 gram generator. **c)** 2 x 60 gram generators. **d)** 3 x 30 gram generators. It is now a matter of determining which option provides the **best** solution.
Step 5	Check **maximum area coverage** and **height limitations** are satisfied. Each of the possible solutions using 30, 60 or 100 E Stat-**X**® generators would satisfy the **maximum area coverage** and **height limitations** listed in the tables included in on page **35**. Whilst a single 100E generator would supply more than the **minimum required quantity** of Stat-**X**®, this would not be a practical option due to the layout of this engine compartment. The best option would be to install Stat-**X**® generators on **either** side of the engine to ensure a uniform distribution of aerosol. Therefore, we should evaluate using 30E or 60E generators as the preferred solution.
Step 6	Check **discharge clearance** at proposed generator installation locations. The minimum **discharge clearances** required for engine compartment applications are listed for all generator sizes in **Table 15** on page **36.** Stat-*X*® Generator Size / Minimum Discharge Clearance (m) 30 gram — **0.12** 60 gram — **0.15** 100 gram — **0.20** Given the geometry of the engine compartment in this example, it should be possible to find suitable mounting locations to achieve the *minimum* **discharge clearance distances** required for 30E or 60E Stat-**X**® generators. **Important** Stat-**X**® generators should also only be aimed to discharge towards non-thermally sensitive components and it is **preferable** to mount each generator so that they are aimed to discharge **horizontally** towards to the engine block. Generators must **not** be aimed to discharge directly at each other.

© 2018 Kidde Australia Pty Ltd

Worked example: Stat-X® system design for engine compartment protection	
	Calculations
Step 7	Note the **discharge time** for the model of Stat-**X**® aerosol generator selected. **Discharge times** for Stat-**X**® aerosol generators are listed in **Table 16** on page **37.** From that table we see: – **30 E** generators have a discharge time of 8 seconds. – **60 E** generators have a discharge time of 8.5 seconds. – **100 E** generators have a discharge time of 11.5 seconds. **Selecting the best Stat-X® configuration** Use of either 30E or 60E Stat-**X**® generators would be satisfactory for this example. However, using 2 x 60E generators provide a **more** cost effective and easy to install option whilst: – Still allowing for one Stat-**X**® aerosol generator to be fitted to **either** side of the engine for a uniform distribution of aerosol. – Providing more aerosol (120 grams versus only 90 grams for 3 x 30E generators) – Providing a **slightly longer** discharge than a system using 30 E generators.

Table 17: Worked design example

© 2018 Kidde Australia Pty Ltd

Marine fire suppression system design

Marine fire suppression system design includes information about:

- **Commercial vessels,** see page **43.**
- **Non-commercial vessels**, see page **43**.
- **Stat-X® system design for marine machinery space protection,** see page **44.**
- **Worked example: Stat-X® system design for marine machinery space protection**, see page **50**.

© 2018 Kidde Australia Pty Ltd

Commercial vessels

Stat-**X**® marine fire suppression systems can be installed to meet the requirements of the *National Standard for Commercial Vessels (NSCV) part C design and construction, section 4 fire safety*.

For any such installation, the discharge of the Stat-**X**® system **must** be manually controlled using **either** a cable pull operation or manually-operated electrical Stat-**X**® generators. For electrically-operated systems, the Kidde MV panel can be used to provide the required functionality.

Non-commercial vessels

Stat-**X**® marine fire suppression systems can also be installed on non-commercial vessels.

For any such installations, it is permissible for the Stat-**X**® fire suppression system to discharge automatically. This could be achieved using:

— A **single** thermally-activated Stat-**X**® generator.

— **Multiple**, electrically-operated Stat-**X**® generators, installed in conjunction with a Kidde MV panel.

There are **six steps** that need to be completed when designing a Stat-**X**® marine fire suppression system. These steps are summarised in the design process chart on page **44.**

© 2018 Kidde Australia Pty Ltd

Stat-X® system design for marine machinery space protection

The design process for the protection of a marine machinery space using a Stat-**X**® fire suppression system is summarised in the following chart. A more detailed explanation of each of the steps is provided in the following pages.

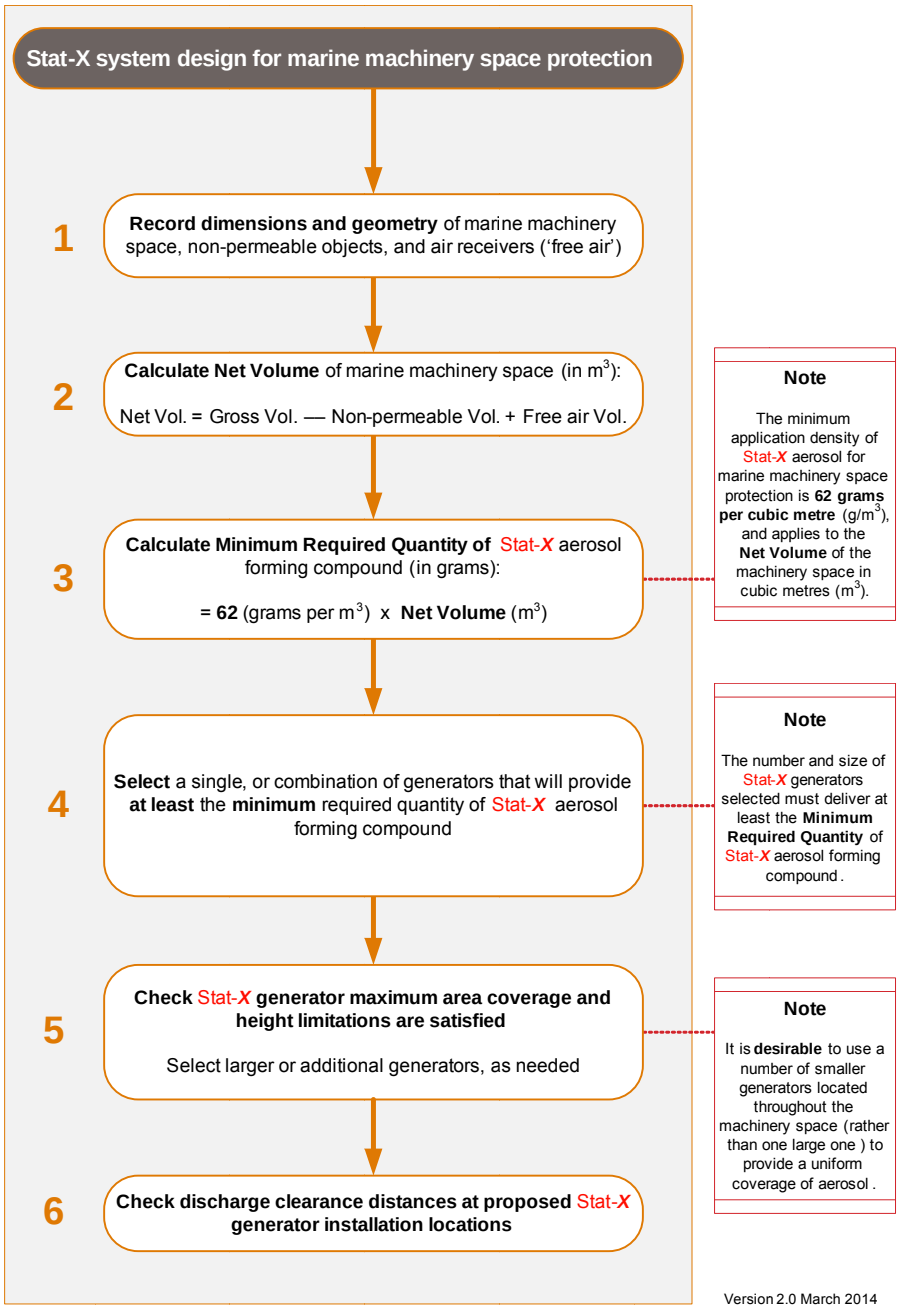

Figure 25: Stat-X® system design for marine machinery space protection

© 2018 Kidde Australia Pty Ltd

Step 1: Record dimensions and geometry of marine machinery space, non-permeable objects and air receivers

a) Record marine machinery space dimensions and geometry in sufficient detail to enable the **net volume** of the space to be calculated.

b) Record dimensions and geometry of any large, **non-permeable objects**, such as, engine blocks, pumps or gearboxes within the machinery space in sufficient detail to enable the volume of each object to be calculated.

c) Record the volume and operating pressure of any **air receivers** (vessels containing compressed air).

Where information on the volume of the air receiver is not readily available, record the dimensions of the vessel in sufficient detail to enable the volume of the vessel to be calculated.

Step 2: Calculate the net volume of the marine machinery space

a) Calculate the **gross volume** in cubic metres (m^3).

As marine machinery spaces are often irregular in shape – it may be easiest to break the machinery space **gross volume** into a number of smaller rectangular and triangular volumes which can be more easily calculated.

A simplified example is shown below, where a marine machinery space (Figure 26) has been broken into one rectangular volume and one triangular volume (Figure 27).

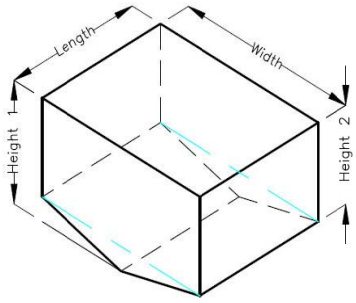

Figure 26: Example of a marine machinery space

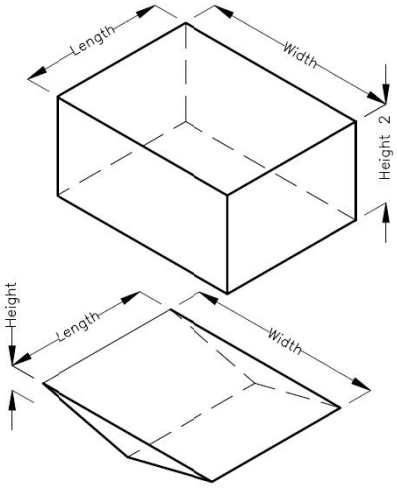

Figure 27: Space broken into two volumes

Calculate volume of rectangular and triangular volumes and add together to calculate the **gross volume**.

© 2018 Kidde Australia Pty Ltd

b) Calculate the **total non-permeable volume** in cubic metres (m^3).

To calculate the volume of objects, such as, engines or transmissions, record the dimensions of an assumed rectangular volume which approximates the total volume of each **non-permeable** object.

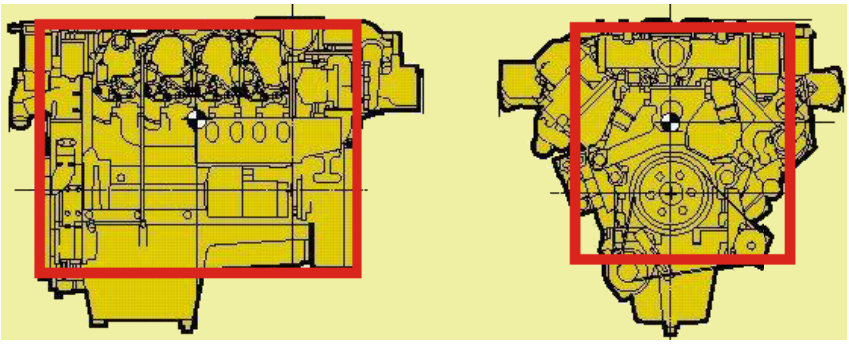

Figure 28: Example of an assumed rectangular volume of a non-permeable object

Add individual non-permeable volumes together to determine the **total non-permeable volume** in cubic metres (m^3).

Important Do **not** include the volume of any objects that will melt **or** be destroyed in a fire, as non-permeable objects.

For example: do **not** include air filter boxes or batteries.

c) Calculate **free air volume** of any **air receivers** (compressed air tanks).

Use the formula: $\mathbf{V_A = P_C \times V_C}$, where:

$\mathbf{V_A}$ is the free air volume, at atmospheric pressure, measured in cubic metres (m^3).

$\mathbf{P_C}$ is the pressure in the air receiver, measured in bar.

$\mathbf{V_C}$ is the volume of the air receiver, measured in cubic metres (m^3).

Free Air Volume (V_A) (m^3) = P_C (bar) x V_C (m^3)

Note The pressure and volume entered into this formula **must** be in the units of **bar** and **m^3** respectively.

See **Worked example: Stat-X® system design for marine machinery space protection,** page **50.**

d) Calculate the **net volume** of the marine machinery space in cubic metres (m^3).

Net volume (m^3) = **Gross vol.** — **Non-permeable vol.** + **Free air vol.**

© 2018 Kidde Australia Pty Ltd

Step 3: Calculate the minimum required quantity of Stat-X® aerosol forming compound

Important The **minimum application density** of Stat-**X**® aerosol for marine machinery space protection is **62 grams per cubic metre** (g/m^3), and applies to the **net volume** of the machinery space in cubic metres (m^3).

a) Use the following formula to calculate the **minimum required quantity** of Stat-**X**® aerosol forming compound.

Minimum Required Stat-X® Quantity (g) **= 62** (g/m^3) X **Net volume** (m^3)

Step 4: Determine the size and number of Stat-X® aerosol generators required

a) Select a single, or combination of generators that will provide **at least** the **minimum** required quantity of Stat-**X**® aerosol forming compound.

Note It is permissible to use **different** size generators to provide the **minimum** required quantity of Stat-**X**®.

b) If using a **single** generator size, the following formula can be used.

$$N = M \div m$$

Where:

N is the **number** of Stat-**X**® aerosol generators required.

M is the minimum required quantity (in grams) of Stat-**X**®.

m is the mass of Stat-**X**® aerosol forming compound in each generator (in grams).

For example, a 60E Stat-**X**® aerosol generator contains 60 grams of aerosol forming compound, so in this case, **m** would equal 60.

Important **Additional** factors, such as, physical size of the generators, discharge clearance distances, maximum coverage areas and height limitations need to be considered **before** finalising the number and size of generators to be installed.

© 2018 Kidde Australia Pty Ltd

Step 5: Check maximum area coverage and height limitations are satisfied

Maximum area coverage and height limitations for **electrically** and **manually operated** Stat-**X**® generators are listed in the table below.

Maximum area coverage and height limitations for electrically and manually operated Stat-X® generators		
Model	**Maximum area coverage (m x m)**	**Maximum installation height (m)**
30 E	1.20 x 1.20	1.20
60 E	1.70 x 1.70	2.00
100 E	2.18 x 2.18	2.50
250 E	3.45 x 3.45	2.75
500 E	4.88 x 4.88	3.50
1000 E	4.88 x 4.88	5.00
1500 E	4.88 x 4.88	5.00
2500 E	4.88 x 4.88	5.00

Table 18: Electrical and manual generator coverage limitations

If a **thermally-operated** Stat-**X**® generator is being used to protect a marine machinery space, the permissible area coverage and installation height limits are as per the table below

Maximum area coverage and height limitations for thermally-operated Stat-X® generators		
Model	**Maximum area coverage (m^2)**	**Maximum installation height (m)**
30 T	0.50	1.00
60 T	0.60	1.80
100 T	0.92	1.80
250 T	2.13	2.00
500 T	3.72	2.50

Table 19: Thermal generator coverage limitations

Note If installing thermally-operated Stat-**X**® generators, **only one** is permitted **per marine machinery space**.

Use of thermally-operated generators is **not** permissible for the protection of machinery spaces on commercial vessels.

Uniform distribution of Stat-X® aerosol

Although a **single** Stat-**X**® generator may be sufficient to provide the required **minimum application density** of aerosol, in congested marine machinery spaces, it is preferable to use **a number of smaller generators** to provide more uniform distribution of aerosol.

© 2018 Kidde Australia Pty Ltd

Step 6: Check discharge clearance at proposed generator installation locations

Stat-**X**® generators should be installed at locations where the **discharge clearance** is as long as possible. Aerosol particles tend to agglomerate (bind together into a solid mass) on any surfaces **within** the *specified* **discharge clearance** – this **reduces** the actual amount of aerosol delivered to fight the fire.

For similar reasons, generators must not be aimed to discharge directly at each other.

Generators should also only be aimed to discharge towards non-thermally sensitive components. It is preferable to mount each generator so that they are aimed to discharge towards to the centre of a marine machinery space.

The minimum **discharge clearance** required for **marine machinery space** applications are listed in the table below.

Stat-X® Generator Size	Minimum Discharge Clearance(m)
30 gram	**0.12**
60 gram	**0.15**
100 gram	**0.20**
250 gram	**0.30**
500 gram	**0.50**
1000 gram	**0.80**
1500 gram	**1.50**
2500 gram	**1.50**

Table 20: Generator discharge clearances

Note The discharge clearance specified above are for engine compartments and machinery space applications **only** and are **shorter** than the discharge clearances specified for applications, such as switch rooms where it is essential that the discharge is as clean as possible.

For these types of applications, **longer** discharge clearances, than those specified above, **must** be used. Contact Kidde for details.

Selecting the preferred Stat-X® aerosol generator configuration

The actual number of generators selected must satisfy **each** of the steps **3** to **6**, as detailed in the engine compartment suppression system design process:

— Select the **best option** (paying consideration to cost, practicality etc.) that satisfies the criteria required for each step of the design process.

© 2018 Kidde Australia Pty Ltd

Worked example: Stat-X® system design for marine machinery space protection

As an example, a commercial fishing vessel requires a Stat-**X**® fire suppression system to be installed in the engine room. The dimensions of the engine room are as shown in the figure below.

Provide **two** options for the number and size of Stat-**X**® aerosol generators which could be used to protect the engine room. List the advantages of each option.

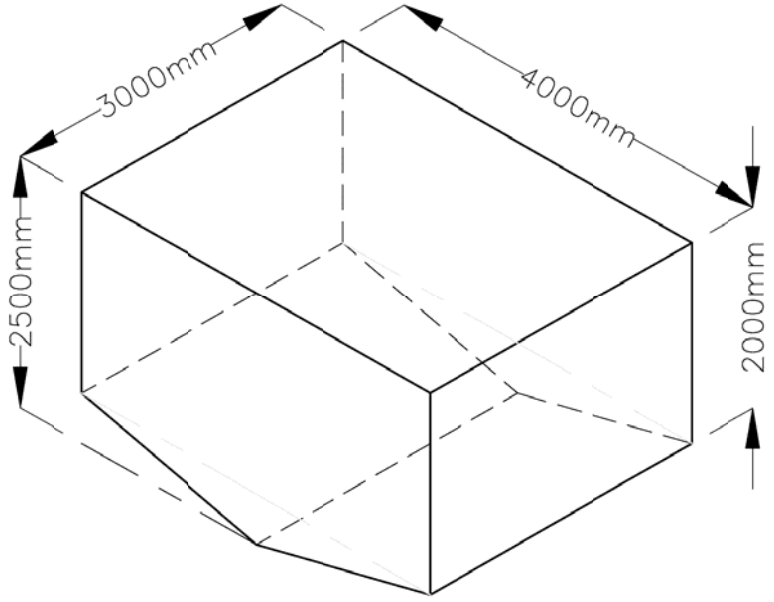

Figure 29: Engine room dimensions

Equipment in the engine room

Equipment in engine room …	Dimensions, capacities …
2 x diesel engines	1,500 mm x 500 mm x 1,000 mm
2 x gear boxes	500 mm x 400 mm x 500 mm
1 x fuel tank	2,000 mm x 1,000 mm x 1000 mm
1 x water tank	1,500 mm x 1,000 mm x 1,500 mm
1 x air receiver	500 litre capacity with 500 kPa operating pressure

Table 21: Equipment dimensions

© 2018 Kidde Australia Pty Ltd

Calculations

Worked example: Stat-X® system design for marine machinery space protection	
	Calculations
Step 1	**Record dimensions and geometry** of engine room, non-permeable objects and air receivers. The dimensions were measured and the results recorded as per the diagrams and table below. 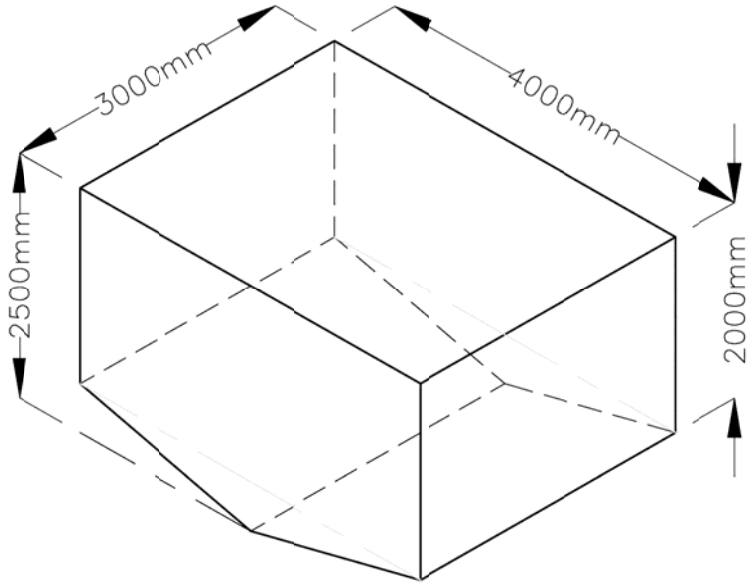 **Figure 30: Engine room dimensions** **Equipment in the engine room** **Equipment in engine room …** / **Dimensions, capacities …** 2 x diesel engines — 1,500 mm x 500 mm x 1,000 mm 2 x gear boxes — 500 mm x 400 mm x 500 mm 1 x fuel tank — 2,000 mm x 1,000 mm x 1000 mm 1 x water tank — 1,500 mm x 1,000 mm x 1,500 mm 1 x air receiver — 500 litre capacity with 500 kPa operating pressure
Step 2	Calculate the **net volume** of the engine room. **a)** Calculate the **gross volume** of the engine room volume in cubic metres (m^3). **Gross volume** (m^3) = **Rectangular volume** = W x L x H = 3.00 x 4.00 x 2.00 = 24.00 m^3 + **Triangular volume** = ½ H x W x L = ½ 0.50 x 4.00 x 3.00 = 3.00 m^3 **Gross volume** (m^3) = 27.00 m^3 **b)** Calculate the **total non-permeable volume** in cubic metres (m^3).

© 2018 Kidde Australia Pty Ltd

Worked example: Stat-X® system design for marine machinery space protection	
	Calculations

Volume of diesel engines (m^3)	= 2 x (W x L x H) = 2 x (1.50 x 0.50 x 1.00) = 1.50 m^3
Volume of gear boxes (m^3)	= 2 x (W x L x H) = 2 x (0.50 x 0.40 x 0.50) = 0.20 m^3
Volume of fuel tank (m^3)	= W x L x H = 2.00 x 1.00 x 1.00 = 2.00 m^3
Volume of water tank (m^3)	= W x L x H = 1.50 x 1.50 x 1.00 = 2.25 m^3
Total non-permeable volume (m^3)	= 1.50 + 0.20 + 2.00 + 2.25 = 5.95 m^3

c) Calculate **free air** volume of the air receiver in cubic metres (m^3).

- **Convert** the volume of the air receiver from litres **to** cubic metres (m^3).

Volume of air receiver (m^3)	= 500 (litres) ÷ 1000 = 0.50 m^3

- **Convert** the gas pressure of the air receiver from kilopascal (kPa) **to** bar.

Pressure in air receiver (bar)	= 500 (kPa) ÷ 100 = 5 bar

- Calculate **free air** volume of the air receiver in cubic metres (m^3).

Free Air Volume (V_A) (m^3)	= P_C (bar) x V_C (m^3) = 5 x 0.50 = 2.50 m^3

d) Calculate the **net volume** of the engine compartment or space in cubic metres (m^3).

Net volume (m^3)	**= Gross vol. — Non-permeable vol. + Free air vol.** = 27.00 — 5.95 + 2.50 = 23.55 m^3

© 2018 Kidde Australia Pty Ltd

Worked example: Stat-X® system design for marine machinery space protection	
	Calculations
Step 3	Calculate the **minimum required quantity** of Stat-**X**® aerosol forming compound. **Minimum Stat-*X*® quantity** (g) = **62** (g/m^3) X **Net volume** (m^3) = 62 x 23.55 = 1460 grams
Step 4	Determine the **size** and **number** of Stat-**X**® generators **required**. Select a single, or combination of generators that will provide **at least** the **minimum** required quantity of Stat-**X**® aerosol forming compound. In this example, a minimum of 1460 grams of Stat-**X**® is required, so options that could be considered include: **a)** 1 x 1500 gram generator. **b)** 2 x 1000 gram generators. **c)** 1 x 1000 plus 1 x 500 gram generator. **d)** 3 x 500 gram generators. It is now a matter of determining which option provides the **best** solution.
Step 5	Check **maximum area coverage** and **height limitations** are satisfied. Each of the possible solutions using 500, 1000 or 1500E Stat-**X**® generators would satisfy the **maximum area coverage** and **height limitations** listed in the tables provided on page **48.**
Step 6	Check **discharge clearance** at proposed generator installation locations. Given the geometry of the engine room in this example, it should be possible to find suitable mounting locations to achieve the *minimum* **discharge clearance** required for 500E, 100 E or 1500E Stat-**X**® generators.

Stat-*X*® Generator Size	Minimum Discharge Clearance (m)
500 gram	**0.5**
1000 gram	**0.80**
1500 gram	**1.50**

Table 22: Generator discharge clearances for selection

Selecting the preferred Stat-X® configuration

Use of 500E, 1000E or 1500E Stat-**X**® generators would be satisfactory for this example.

Most cost effective and easy to install option

A **single 1500E generator** would provide the most cost effective and easy to install option provided the required **discharge clearance** can be achieved and the aerosol is able to uniformly distribute throughout the engine room.

Next most cost effective option

If the **discharge clearance** of 1.5 metres cannot be satisfied, use of 1 x **1000E** and 1 x **500E** generators would provide the next most cost effective solution.

© 2018 Kidde Australia Pty Ltd

Installation guidelines for Stat-X® fire suppression systems

Installation guidelines for Stat-X® fire suppression systems include:

— **Installation guidelines for vehicle systems**, see page **55.**
— **Installation guidelines for marine systems,** see page **57.**
— **Installation of electrically-operated Stat-X® generators,** see page **58.**
— **Installation of a discharge confirmation (thermal) switch** page **61**.
— **Stat-X® fire suppression system labels**, see page **62.**
— **Commissioning Stat-X® fire suppression systems,** see page **63.**

© 2018 Kidde Australia Pty Ltd

Installation guidelines for vehicle systems

A line diagram showing the inputs and outputs of the LV panel is shown in **Figure 31**

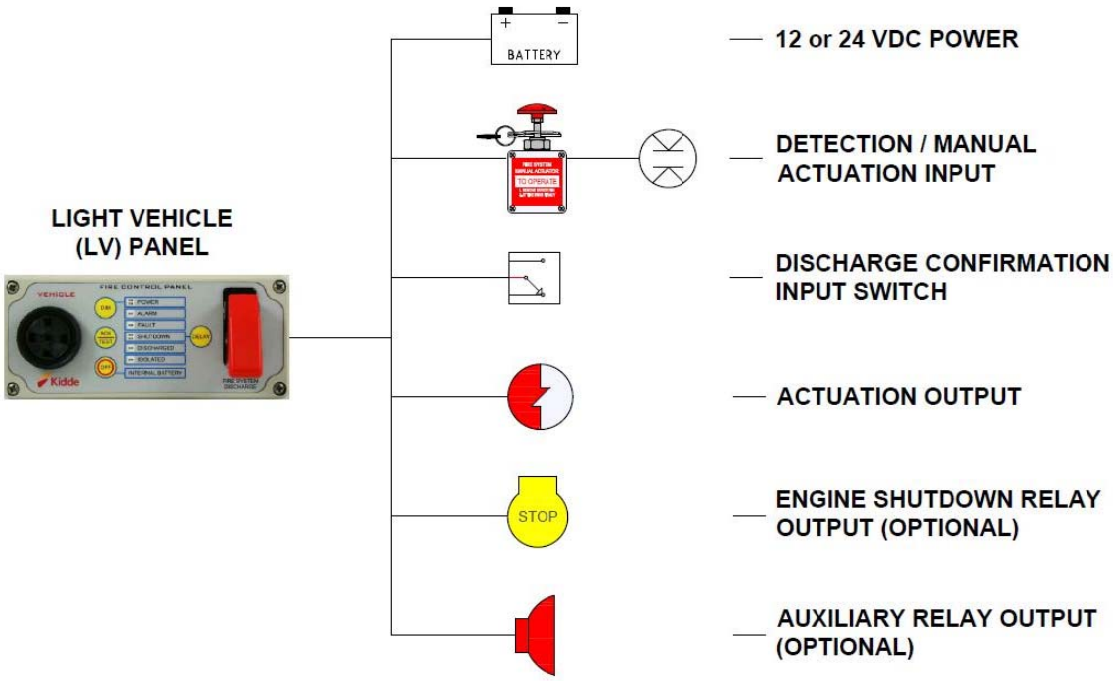

Figure 31: Line diagram – LV Inputs/Outputs

The following guidelines apply to the installation of Stat-**X**® vehicle fire suppression systems:

1 Typical light vehicle or congested engine compartments, such as, 4WD vehicles should be protected using **at least two** Stat-**X**® aerosol generators, with one mounted on **either side** of the engine.

It is permissible to protect larger engine compartments, which do **not** have significant obstructions, using a single Stat-**X**® generator provided there is adequate aerosol distribution.



Figure 32: Example of larger engine compartment, without significant obstructions, protected with a single Stat-X® generator

© 2018 Kidde Australia Pty Ltd

2 For engine compartments which are open on the bottom, avoid mounting Stat-**X**® aerosol generators low in the engine compartment and aimed upwards.

In that configuration, as the aerosol is discharged, fresh air is drawn into the compartment which reduces density of the aerosol, and hence the fire suppression effectiveness of the discharge.

It is preferable to mount Stat-**X**® aerosol generators to discharge horizontally towards the engine.



Figure 33: Example of generators aimed to discharge horizontally towards non thermally-sensitive components, such as, the engine block

3 Avoid aiming the generators to discharge towards any thermally-sensitive objects, such as, noise insulation materials attached to the underside of the bonnet.

4 Ensure **discharge clearances** are met.



Figure 34: Example of checking the discharge clearance distance of a Stat-X® generator

5 If installing a **thermally-operated** Stat-**X**® generator, only **one** is permitted per engine compartment.

6 Multiple manually-operated (cable) generators may be connected in a **dual pull** arrangement.

7 Multiple electrically-operated Stat-**X**® generators should be **wired in series**.

© 2018 Kidde Australia Pty Ltd

Installation guidelines for marine systems

A line diagram showing the inputs and outputs of the MV panel is shown in Figure 35.

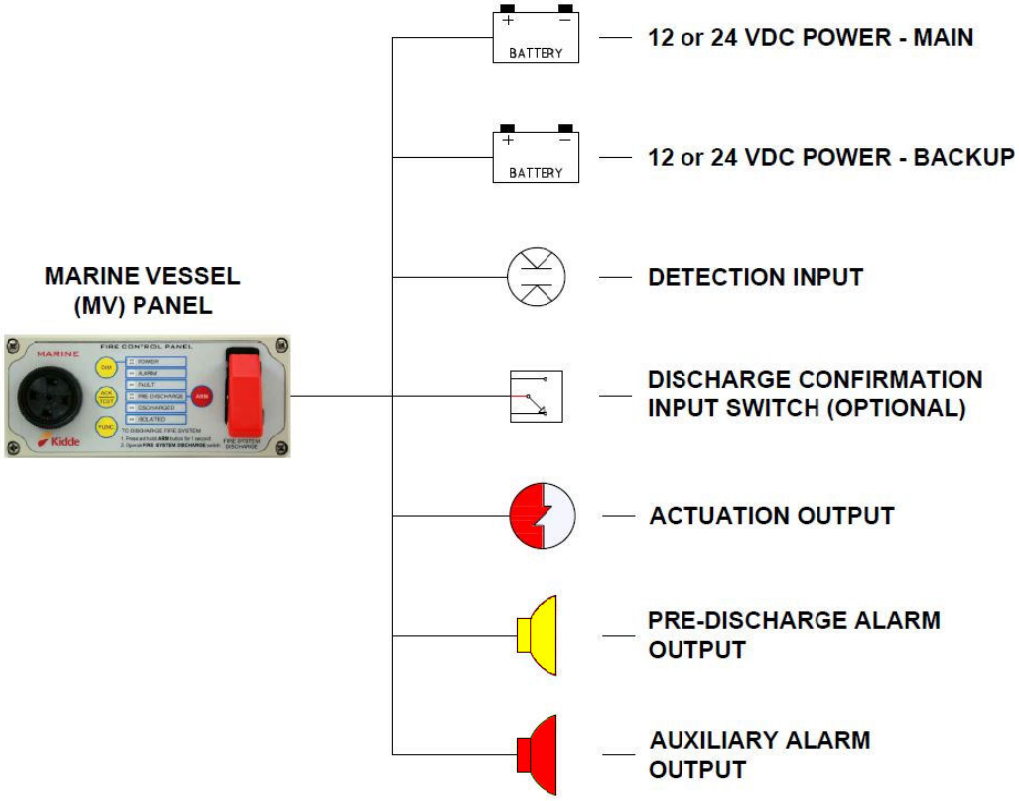

Figure 35: Line diagram – MV Inputs/Outputs

The following guidelines apply to the installation of Stat-**X**® marine fire suppression systems:

1 It is permissible to protect larger marine machinery spaces, which do not have significant obstructions, using a single Stat-**X**® generator to provide adequate aerosol distribution.

2 Congested machinery spaces where the Stat-**X**® aerosol would not be uniformly distributed from a single generator may need to be protected using a number of smaller generators.

3 Avoid aiming the generators to discharge towards any thermally-sensitive material.

4 Ensure **discharge clearances** are met.



Figure 36: Example of a larger marine machinery spaces without significant obstructions protected with a single Stat-X® generator

© 2018 Kidde Australia Pty Ltd

Installation of electrically-operated Stat-X® generators

Fire-rated cable **must** be used to connect electrically-operated Stat-**X**® fire suppression system components **within** an engine compartment or marine machinery space.

All electrical connections, within the engine compartment or marine machinery space, **must** be **completed** using metal junction boxes or similar.

Use **conduit** or **spiral wrap sheath** protector to protect any cable that will be subject to heat, vibration or **abrasion**.



Figure 37: Conduit connected to a Stat-X® generator



Figure 38:Spiral wrap sheath protector

To install electrically-operated Stat-**X**® aerosol generators, complete the following:

1 Identify suitable Stat-**X**® generator mounting bracket locations that:

- **a)** Ensure required **discharge clearance distances** are achieved.
- **b)** Provide sufficient clearance at the back of the generator to allow connection with the discharge circuit wiring.

2 Secure brackets to the vehicle or vessel.

3 Check the electrical resistance of **each** Stat-**X**® initiator.

Electrical resistance reading should be between 1.4 and 2.0 ohm.

4 Apply thread tape to the ¾" NPT thread on the Stat-**X**® generator.

5 Feed the Stat-**X**® initiator wires through the cable gland adaptor and screw it on to the generator.

Warning Hand tighten only – do **not** over tighten as this can **break the seal** on the end plate of a Stat-**X**® generator. The maximum force that can be used when tightening an adaptor onto the threads of a Stat-**X**® aerosol generator is fifteen foot pounds or twenty newton meters of torque.

6 Loosely fit each Stat-**X**® generator into their designated mounting bracket.

© 2018 Kidde Australia Pty Ltd

7 If **no** conduit is being used, fit a cable gland on the discharge circuit cable.

Strip the wires on the cable and connect to the Stat-**X**® generator initiator wires using suitable screw connectors.

Note If required, the Stat-X® initiator wires **can** be cut to length.

Feed the connected wiring inside the cable gland adaptor and screw and tighten cable gland over the **outer** sheath of the **discharge circuit cable**.

8 If **using** conduit, attach a thread adaptor to suit. The conduit connection **must** have a swivel adaptor to allow tightening of the thread **without** twisting the cable. Tighten the conduit nut to the adaptor body.

9 Secure the generator in the bracket and adjust and tighten the bracket so that the generator is aimed to discharge in the required direction.



Figure 39: Two core fire-rated cable connected to a Stat-X® generator using an elbow adaptor and cable gland

© 2018 Kidde Australia Pty Ltd

Installation of multiple generators

If **more** than one electrical Stat-**X**® generator is being installed, they must be connected in series. Two series wiring examples are shown below in Table 23:

Example 1: Multiple junction boxes	Example 2: Single junction box
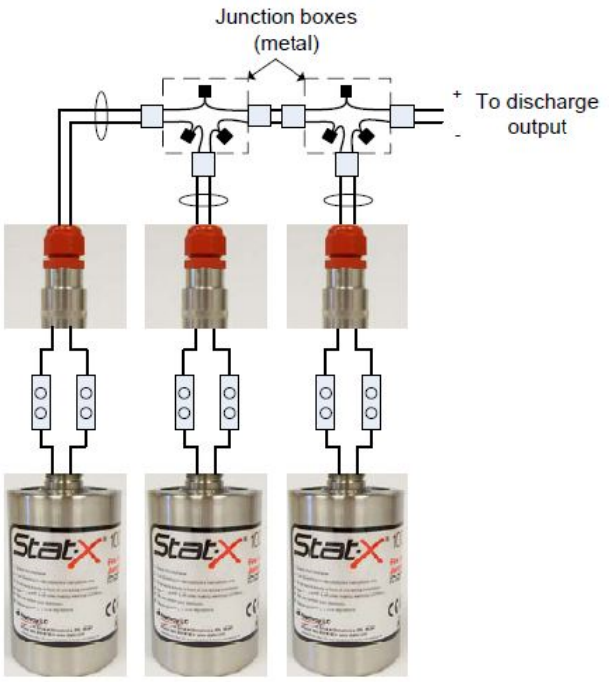	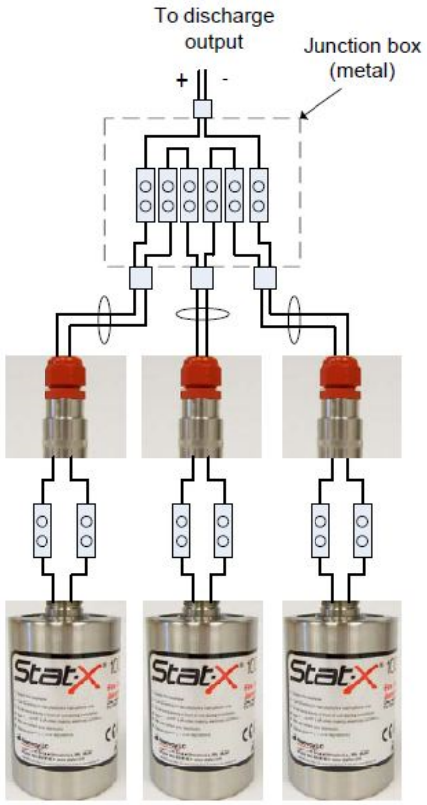

Table 23: Examples of series wiring of multiple generators

The **discharge** output on the LV panel is capable of activating of up to a **maximum of 5** Stat-**X**® aerosol generators, connected in series.

The **discharge** output on the MV panel switches incoming panel power supply voltage is capable of activating:

- Up to **maximum of 3** Stat-**X**® aerosol generators, connected in series for **12 volt** powered systems.
- Up to **maximum of 8** Stat-**X**® generators for **24 volt** powered systems.

© 2018 Kidde Australia Pty Ltd

Installation of a discharge confirmation (thermal) switch

A 'discharge' switch is used to confirm that the extinguishing agent (aerosol) has been released from the fire suppression system. For Stat-**X**® systems, a thermal switch is used to provide this discharge confirmation. If installing multiple generators, only **one** thermal switch is required.



Figure 40: Discharge confirmation (thermal) switch attached to a Stat-X® generator

To install a discharge confirmation (thermal) switch kit (Part No. **001-930**):

1. Attach the switch to the outside of an electrical or thermal Stat-X® generator using an epoxy adhesive and stainless steel cable ties.

Note The circumference of the largest Stat-**X**® generator (2500) is 638 mm.

2. Use an in-line brass enclosure (Part No. **001-988.1**) (supplied as part of the thermal switch kit) to connect the thermal switch fly lead to the fire-rated cable routed to the fire panel.

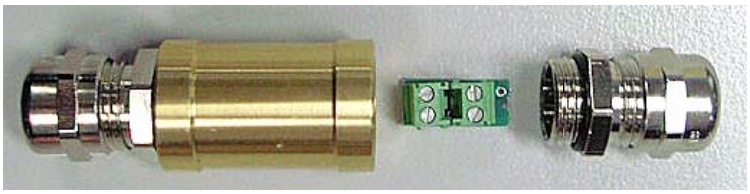

Figure 41: In-line enclosure

3. Secure the in-line enclosure to the Stat-**X**® bracket or nearby using a 19 mm P-clip (Part No. **103198**).



Figure 42: In-line enclosure mounted to a Stat-X® generator bracket

© 2018 Kidde Australia Pty Ltd

Stat-X® fire suppression system labels

A number of labels are available to suit specific applications of Stat-**X**® fire suppression systems.

Warning labels

Warning labels to indicate that a Stat-**X**® vehicle fire suppression system is installed should be fitted at appropriate and visible locations on the vehicle or vessel.

For example, labels should be fitted at the entry point(s) into a compartment or marine machinery space to advise that the space is protected with a Stat-**X**® marine fire suppression system.



Figure 43: Warning label fitted to 4WD engine compartment



Figure 44: Stat-X® warning label



Figure 45: Warning label fitted to marine machinery space

© 2018 Kidde Australia Pty Ltd

Commissioning Stat-X® fire suppression systems

Stat-**X**® fire suppression systems must be commissioned **before** they are put to service – this is done to ensure that the system is installed correctly, meets design specifications and is fully functional.

A commissioning checklist is used to make sure that **all** required commissioning tasks have been **completed satisfactorily**.

Vehicle system commissioning

- Use the **Vehicle system installation commissioning checklist** provided on page **76** to **complete** the commissioning of **all** Stat-**X**® vehicle fire suppression systems.
- Following commissioning of a Stat-**X**® vehicle fire suppression system, **complete** the **Vehicle system commissioning report** provided on page **78.**

Marine system commissioning

- Use the **Marine system installation commissioning checklist** provided on page **80** to **complete** the commissioning of **all** Stat-**X**® marine fire suppression systems.
- Following commissioning of a Stat-**X**® marine fire suppression system, **complete** the **Marine system commissioning report** provided on page **82.**

© 2018 Kidde Australia Pty Ltd

Maintenance of Stat-X® fire suppression systems

Maintenance of Stat-**X**® fire suppression systems includes:

- **Routine service schedules**, see page **66.**
- **Service records**, see page **67.**
- **Replacement of Stat-X® aerosol generators,** see page **68.**
- **Post-discharge maintenance,** see page **70**.
- **Recycling aerosol generators post** discharge**,** see page **71.**

© 2018 Kidde Australia Pty Ltd

Stat-**X**® fire suppression systems require **significantly less maintenance** than other fire suppression systems; however, a regular program of systematic maintenance must be implemented to ensure continued, proper operation of any fire suppression system.

A maintenance program is intended to preserve the function and performance of the fire protection system, and confirm that the system will operate as designed.

In general, fire suppression systems are maintained according to relevant legislative and customer requirements, Australian standards and manufacturers' documentation.

There are **two** Australian Standards relevant to the maintenance of Stat-**X**® fire suppression systems:

— AS 1851, *Routine service of fire protection systems and equipment*. Section 7 *Special Hazards Systems* covers the service requirements for fixed aerosol systems.

— AS 5062, *Fire protection for mobile and transportable equipment*.

The service schedules detailed in the following section are based upon the requirements of these standards.

© 2018 Kidde Australia Pty Ltd

Routine service schedules

Routine service for Kidde Stat-**X**® vehicle and marine fire suppression systems include **daily**, **six-monthly** and **yearly** schedules.

The schedules set minimum requirements only, and in all cases, local conditions where the system is fitted should be taken into consideration when setting maintenance frequencies.

> For example, in harsh environments the yearly service may need to be carried out every 6 months.

The following schedules detail the tasks required to be completed for Stat-**X**® fire suppression systems. For specific information related to the maintenance of fire detection and control systems, refer to the appropriate panel manual:

— *Light vehicle (LV) panel installation and maintenance manual*.

— *Marine vessel (MV) panel installation and maintenance manual*.

— *VS-MKII Control System: installation, operation and maintenance manual*.

Daily operator checks

It is recommended that the vehicle operator or vessel master complete the following **daily checks**:

Daily requirements		
Item		**Actions Required and Pass/Fail Requirement**
1	Manual actuators	**a)** Check all release anti-tamper seals and pull pins are secure and in place. **b)** Check all actuators are secure, clean, undamaged and accessible.
2	Control panel (if fitted)	**a)** Check that all indicators show normal condition. **b)** Check that all panels are secure, clean, undamaged and accessible. Refer to the control panel manual for **detailed** instructions.

Six-monthly schedule

Complete the **daily** schedule, and then the **six-monthly** inspect and test schedule activities and procedures listed in the table below, as required:

Six-monthly requirements		
Item		**Actions Required and Pass/Fail Requirement**
1	Manual actuators	Test operation.
2	Control panel (if fitted)	Test all indicators and audible alarms. Refer to the control panel manual for **detailed** instructions.

© 2018 Kidde Australia Pty Ltd

Six-monthly requirements		
Item		**Actions Required and Pass/Fail Requirement**
3	Labels	Check manual release, system warning and instruction labels are securely in place, visible and legible.
4	Stat-**X**® generators	**a)** Check discharge seal is intact and generators are undamaged, unobstructed and correctly aimed.  **Figure 46: Discharge seal inside discharge ports must be intact** **b)** Check generator label is visible and legible. **c)** Check brackets are secure and undamaged.
5	Discharge circuit	Check wiring, connections and supports are intact and undamaged.
6	Detection system	Check detectors, wiring, connection and support are intact, not damaged and detectors are in position.

Yearly schedule

Complete the **daily** and **six-monthly** schedules, and then the **yearly** inspect, test preventative maintenance schedule activities and procedures listed in the table below, as required:

Yearly requirements		
Item		**Actions Required and Pass/Fail Requirement**
1	Stat-**X**® generators	Check date of manufacture and replace as required (10 year service life).
2	Discharge circuits	**a)** Function test all discharge circuits. **b)** Check all wiring and circuits for earth faults. Refer to the control panel manual for **detailed** instructions.
3	Detection system	Check detectors, wiring, connection and support are intact, not damaged and detectors are in position. Refer to the control panel manual for **detailed** instructions.
4	System interface and full function testing	**a)** Test all fire system interfaces and shutdowns and record delay time. **b)** Complete full function test of all inputs and outputs of the control system. Refer to the control panel manual for **detailed** instructions.

Service records

Use the **Service report** provided on page **84** to record completed service activities.

© 2018 Kidde Australia Pty Ltd

Replacement of Stat-X® aerosol generators

Stat-**X**® aerosol generators have a **ten-year** service life **after** which they need to be replaced.

Each Stat-**X**® generator has the date of manufacture recorded on the product label.

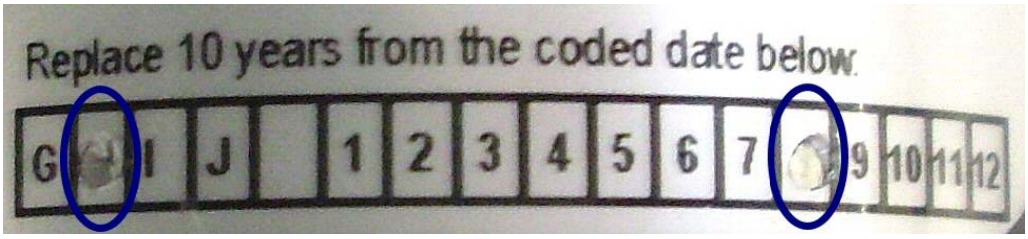

Figure 47: Example date code on Stat-X® aerosol generator product label

The **date code** appears in the following format:

— **Alphabetic** characters represent the year of manufacture.

— **Numerals** represent the month of shipment from the factory.

For example, where a date code appears as shown in the figure above:

G **H** I J 1 2 3 4 5 6 7 **8** 9 10 11 12

Where G = 2007, H = 2008, I = 2009, and so on.

A Stat-**X**® aerosol generator marked as **H 08**, would have been manufactured in **August**, **2008**.

The year of manufacture can also be determined by checking the number etched on the Stat-**X**® generator body. The **first two digits** of the number represent the year of manufacture and the next **3 digits** represent the day of manufacturer for that year.

A Stat-**X**® aerosol generator marked as **12089**, would have been manufactured in on the 89th day (March 29th) of 2012.



Figure 48: Date code etched on generator body

© 2018 Kidde Australia Pty Ltd

Stat-**X**® aerosol generators that have **exceeded** their 10 year service life should either be:

— Discharged in a safe location.

OR

— Have the non-permeable discharge membrane pierced and the generator submerged in water for **at least one hour** to deactivate the aerosol-forming compound.

The generators can then be disposed of as non-hazardous waste.

See

Recycling aerosol generators post discharge, page **71.**

© 2018 Kidde Australia Pty Ltd

Post-discharge maintenance

Stat-**X**® post-discharge maintenance involves the following:

1. Ventilate the protected compartment or space as soon as practical.
2. Investigate the cause of discharge and perform corrective action.
3. Clean any remaining residue from surfaces by either:
   - **a)** vacuuming, blowing, brushing, or if necessary
   - **b)** by washing with a water/alcohol mixture.
4. Remove spent generators.

   Note Stat-**X**® generators remain **hot** for some time **after** discharge.
5. Install new generators.
6. Function test and re-commission the system.

© 2018 Kidde Australia Pty Ltd

Recycling aerosol generators post discharge

In most cases, the discharged generator can be disposed of in any landfill that handles industrial waste. However, local regulations must be researched and observed.

Each discharged aerosol generator contains the following materials:

- **Stainless steel outer shell** – all models.
- **Mild steel cross members** found in the following models: 30, 60, 100, 250 and 500.
- **Mild steel spacer ring** – all models.
- **Stainless steel inner shell**, top and bottom plates, screens (all models), and cross members in the following models: 1000 E, 1500 E, and 2500 E.
- **Activated alumina**: CAS 1333-84-2 (aluminium oxide, non-fibrous) – all models.

© 2018 Kidde Australia Pty Ltd

Safety and environmental information

There are **no** environmental issues associated with the use of Stat-**X**® aerosol generators. Both the ozone depletion potential (ODP) and global warming potential (GWP) are **zero**.

Safety and environmental information includes:

— **Toxicity and health information**, see page **73.**

© 2018 Kidde Australia Pty Ltd

Toxicity and health information

Stat-**X**® aerosol generators do not present a health hazard in their benign state – as the constituent chemicals are pressed into a solid form that is extremely stable, even at elevated temperatures. There are no environmental or health hazards from the solid form of the constituent chemicals in storage.

Interaction with fire

Unlike gaseous extinguishing agents, the aerosol does not decompose in the presence of fire nor does it extinguish by oxygen deprivation. Stat-**X**® suppresses fire (primarily) by chemical interference with the 'fire propagation' free radicals OH•, H•, and O• that are essential to the expansion of fire. Stat-**X**® interacts rapidly with these free radicals within the fire zone – thus interrupting the on-going fire chemical reaction.

Stat-**X**® aerosol, itself, consists of solid and gas combustion products. The solid phase is composed of highly dispersed particles of salts and oxides of alkaline metals that present insignificant health hazards for humans at normal design concentrations. The gas phase may contain small amounts of carbon monoxide CO, carbon dioxide CO_2, nitrogen oxides NO_X, and ammonia NH_3.

Production of these gases is minimal in the case of Stat-**X**® due to its patented construction, chemical formulation, and its manufacture in the United States using only technical and reagent grade chemicals.

In tests conducted by a certified, accredited testing facility in the United States, Stat-**X**® aerosol generators were shown to produce gas levels several orders of magnitude **less than** the standard allowed for automobile airbag systems for passenger vehicles. See **Stat-X® aerosol: toxicology test results,** page **86.**

Effects of exposure

Tests have shown no long-term negative effects from exposure to the aerosol. Whilst the components of the aerosol are not considered toxic at normal concentration levels, ingestion of the ultra-fine particulate may cause short-term discomfort and unnecessary exposure should be avoided.

Studies conducted to date, indicate that any potential toxicological issues with the aerosols in general are related to possible elevated levels of potentially harmful products that may be produced in the gas phase, such as, CO, NO_X, etc. and not due to the influence of the solid particulate[1,2]. With Stat-**X**®, in particular, the effect is negligible due to the extremely low level of gas production.

See **Stat-X® aerosol: toxicology test results**, page **86.**

© 2018 Kidde Australia Pty Ltd

In tests conducted by VNIIPO (Russian State Fire Protection Institute), the aerosol was considered to have the same acute toxicity as Halon 1301[3].

The Toxicology Institute of the Public Health and Medical Department of the Russian Federation and tests conducted by the Institute of Biophysics (Department of Public Health and Medicine Russian Federation), as well as others, have shown that the aerosol does not present a health hazard due to limited accidental exposure at normal design concentrations.

Exposure to the aerosol is generally of less concern than is exposure to the decomposition products of a fire. Accidental exposures, under five minutes, are normally considered safe.

Warning Certain safety restrictions, however, should always be observed.

Exposure to the aerosol should be **avoided** as ingestion of the ultra-fine particulate **may** cause short-term discomfort.

The discharge of the aerosol also has a relatively high obscuration factor.

[1] E.A. Smith, E.C. Kimmel, et al, "Toxological Evaluation of Exposure to Two Formulations of a Pyrotechnically-Generated Aerosol: Range Finding and Multiple Dose", HOTWC.96.

[2] "Search of Halon Alternatives in Fire Extinguishing" Safety Problems During Emergency Situations, Issue 1-M, 1992, pages 73-79.

[3] *Andreev V.A., et al, "Replacement of Halon in Fire Extinguishing Systems", Proceedings of the Halon Alternatives Technical Working Conference, 1993.

Material safety data sheet

Material safety data sheet (MSDS) for Stat-**X**® aerosol can be found in the Appendices of this manual. See **Stat-X® aerosol: material safety data sheet,** page **87.**

© 2018 Kidde Australia Pty Ltd

Appendices

Appendices for Stat-**X**® fire suppression systems include:

— **Vehicle system installation commissioning checklist,** see page **76.**
— **Vehicle system commissioning report,** see page **78.**
— **Marine system installation commissioning checklist,** see page **80.**
— **Marine system commissioning report,** see page **82**.
— **Stat-X® aerosol: toxicology test results,** see page **86.**
— **Stat-X® aerosol: material safety data sheet,** see page **87.**
— **Feedback form,** see page **97.**

© 2018 Kidde Australia Pty Ltd

Vehicle system installation commissioning checklist

Kidde	**Vehicle system installation commissioning checklist**	Stat-X®

Customer	
Vehicle make	
Vehicle model	

	Commissioning Item	✓ - Pass ✘ - Fail N/A	Comments
1	**System configuration as per design**		
2	**Warning signs or labels installed at access points to protected compartment**		
3	**Owner's manual supplied**		
4	**Stat-X® generators**:		
	a) Correct number of, size and type of generators installed		
	b) Correctly oriented and unobstructed		
	c) Undamaged and securely bracketed		
	d) Discharge seal intact		
	e) Area coverage and maximum installation height limits observed		
	f) Discharge clearance limits observed		
	g) Date of manufacture recorded		
5	**Mechanical release components**:		
	a) Accessible		
	b) Operating instructions in place		
	c) Undamaged and securely bracketed		
	d) Function tested		
6	**Electrical detection, alarm and actuation components**:		
	a) Manual release easily accessible		
	b) Operating Instructions in place		

© 2018 Kidde Australia Pty Ltd

	Commissioning Item	✓ - Pass ✗ - Fail N/A	Comments
	c) Fire detectors installed and function tested*****		
	d) Fire alarms (audible and visual) installed and function tested*****		
	e) Discharge circuits function tested*****		
	f) Fire-rated cabling used within the protected compartment		
	g) Cabling securely fastened		
	h) Electrical resistance of discharge circuits*****		
	i) Control panel function tested and clear of faults*****		
	j) Discharge missile switch anti-tamper seal fitted		
***** Refer to the control panel manual for detailed instructions			

Comments	
Checked by	
Signature	
Date	

© 2018 Kidde Australia Pty Ltd

Vehicle system commissioning report

Kidde	**Vehicle system commissioning report**	Stat-X®

Customer				
Vehicle make		**Vehicle model**		
Vehicle identification number or serial number		**Fire hazard locations being protected**		
Number of Stat-X® aerosol generators installed		**Stat-X® aerosol generator(s): date(s) of manufacture**		
Equipment shutdown delay period		**Discharge delay period**		
Stat-X® vehicle system installation commissioning checklist completed			☐ Yes	☐ No
Additional remarks				

Compartment Protected	**Net Enclosure Volume (m^3)**	**Stat-X® Aerosol Generators Fitted**		**Application Density (grams/m^3)**	**Method of Actuation (✓)**
		Number	**Model**		
					☐ Electrical ☐ Thermal ☐ Manual
					☐ Electrical ☐ Thermal ☐ Manual
					☐ Electrical ☐ Thermal ☐ Manual

© 2018 Kidde Australia Pty Ltd

	Vehicle system commissioning report	

☐	**Commissioning checks of the system have been completed (✓)** **Refer to Stat-X® vehicle system installation commissioning checklist for details**

Commissioned by	
Signature	
Date	

Customer acknowledgement

The customer acknowledges that:

- They have read and understood the risks as identified in the Fire Risk Assessment document which has been completed for this equipment.
- The Stat-**X**® vehicle fire suppression system will assist in fire risk reduction but will not prevent a fire occurring.

Customer	
Signature	
Date	

© 2018 Kidde Australia Pty Ltd

Marine system installation commissioning checklist

Kidde	**Marine system installation commissioning checklist**	Stat-X®

Customer	
Vessel name	
Vessel model	

	Commissioning Item	✓ - Pass ✘ - Fail N/A	Comments
1	**System configuration as per design**		
2	**Warning signs or labels installed at entrance points to protected space**		
3	**Owner's manual supplied**		
4	**Stat-X® generators**:		
	a) Correct number of, size and type of generators installed		
	b) Correctly oriented and unobstructed		
	c) Undamaged and securely bracketed		
	d) Discharge seal intact		
	e) Area coverage and maximum installation height limits observed		
	f) Discharge clearance distance limits observed		
	g) Date of manufacture recorded		
5	**Mechanical release components**:		
	a) Accessible		
	b) Operating instructions in place		
	c) Undamaged and securely bracketed		
	d) Function tested		
6	**Electrical detection, alarm and actuation components**:		
	a) Manual release easily accessible		
	b) Operating Instructions in place		

© 2018 Kidde Australia Pty Ltd

	Commissioning Item	✓ - Pass ✘ - Fail N/A	Comments
	c) Fire detectors installed and function tested*****		
	d) Fire alarms (audible and visual) installed and function tested*****		
	e) Discharge circuits function tested*****		
	f) Pre-discharge alarms (audible and visual) installed and function tested*****		
	g) Fire-rated cabling used within the protected space		
	h) Cabling securely fastened		
	i) Electrical resistance of discharge circuits*****		
	j) Control panel function tested and clear of faults*****		
	k) Discharge missile switch anti-tamper seal fitted		
***** Refer to the control panel manual for detailed instructions			

Comments	
Checked by	
Signature	
Date	

© 2018 Kidde Australia Pty Ltd

Marine system commissioning report

Kidde	Marine system commissioning report	Stat-X®

Customer				
Vessel make		Vessel model		
Vessel identification number or serial number		Fire hazard locations being protected		
Number of Stat-X® aerosol generators installed		Stat-X® aerosol generator(s): date(s) of manufacture		
Pre-discharge delay period				
Stat-X® marine system installation commissioning checklist completed			☐ Yes	☐ No
Additional remarks				

Compartment Protected	Net Enclosure Volume (m^3)	Stat-X® Aerosol Generators Fitted		Application Density (grams/m^3)	Method of Actuation (✓)
		Number	Model		
					☐ Electrical ☐ Thermal ☐ Manual
					☐ Electrical ☐ Thermal ☐ Manual
					☐ Electrical ☐ Thermal ☐ Manual

© 2018 Kidde Australia Pty Ltd

	Marine system commissioning report	

☐	**Commissioning checks of the system have been completed (✓)** **Refer to Stat-X® marine system installation commissioning checklist for details**

Commissioned by	
Signature	
Date	

Customer acknowledgement	
Customer	
Signature	
Date	

© 2018 Kidde Australia Pty Ltd

Service report

Kidde	**Service report**	Stat-X®

Work order no.		**Date**	

Customer name		**Contact name**	
Customer address			
Telephone no.		**Mobile no.**	
Email address.			

Equipment type		**Equipment make**	
Equipment model		**Equipment s/n**	
Equipment location			

Stat-X® system type	☐ Vehicle	☐ Marine	
Generator model(s)		**Number of generators**	
Date(s) of manufacture			

Service schedule

Servicing is to be conducted in **accordance** with relevant Australian Standards and manufacturers' manuals

Item	Service	Daily	6 Mthly	Yearly	Comments	Pass /Fail	Defects
1	Manual actuators – Check	✓	✓	✓			
2	Control panels – Check	✓	✓	✓			
3	Manual actuators – Test		✓	✓			
4	Control panels –Test		✓	✓			
5	Labels – Check		✓	✓			
6	Stat-X® generators – Check		✓	✓			
7	Discharge circuit – Check		✓	✓			

© 2018 Kidde Australia Pty Ltd

Service schedule							
Servicing is to be conducted in **accordance** with relevant Australian Standards and manufacturers' manuals							
Item	**Service**	**Daily**	**6 Mthly**	**Yearly**	**Comments**	**Pass /Fail**	**Defects**
8	Detection system – Check		✓	✓			
9	Stat-X® generators – Check date			✓			
10	Discharge circuit – Check & function test			✓			
11	Detection system – Check			✓			
12	System interface – Function test			✓			

Record of all repairs

Record of parts used		
Does system meet original 'design specifications'?	☐ Yes	☐ No
If No, detail changes		

Name of technician		**Signature**	
Name of customer		**Signature**	
Date			

© 2018 Kidde Australia Pty Ltd

Stat-X® aerosol: toxicology test results

Stat-X **Aerosol Physical Properties**
Average Values @ 100 gram/m³ Concentration

Gas Products: (ppm)	*Stat-X* **15 minute TWA***	**Automobile-Airbag Emission Standard 20 minute TWA***	**NIOSH IDLH**
NO_2	1.08	9.90	20.00
NO	0.97	50.10	100.00
NO_X = NO + NO_2	2.05	60.00	120.00
CO	84.20	445.00	1,200.00
CO_2	756.00	40,000.00	40,000.00
NH_3	58.30	151.50	300.00
Solid Particulate:			**Percent**
K_2CO_3			55.2%
$KHCO_3$			8.2%
KNO_2			7.9%
Other Potassium Compounds			5.5%
NH_4HCO_3			23.2%
pH in solution = 8.6			
Particle Size Distribution:			**Percent**
< 1μm			3%
< 2μm			76%
< 5μm			97%
> 5μm			3%
Operating and Storage Conditions:			
Humidity			Up to 98% @+35°C
Temperature			- 54°C to + 54°C
Shelf Life			10 years +

* TWA = Time Weighted Average

Figure 49: *Stat-X*® Aerosol Toxicology

© 2018 Kidde Australia Pty Ltd

Stat-X® aerosol: material safety data sheet

SAFETY DATA SHEET

STAT-X® CONDENSED AEROSOL GENERATORS - MODELS 30 THRU 2500

Infosafe No.: LQ4A3
Version No.: 1.0
ISSUED Date: 03/03/2015
ISSUED BY KIDDE AUSTRALIA

1. IDENTIFICATION

GHS Product Identifier
STAT-X® CONDENSED AEROSOL GENERATORS - MODELS 30 THRU 2500

Company Name
KIDDE AUSTRALIA

Address
Unit 3
Ground Floor
10 Ferntree Place Notting Hill
Vic 3168 Australia

Telephone/Fax Number
Tel: (03) 9518 5588

Emergency phone number
1800 672 171

Recommended use of the chemical and restrictions on use
Fire extinguisher.

2. HAZARD IDENTIFICATION

GHS classification of the substance/mixture
Classified as Hazardous according to the Globally Harmonised System of Classification and labelling of Chemicals (GHS) including Work, Health and Safety regulations, Australia.
Classified as Dangerous Goods according to the Australian Code for the Transport of Dangerous Goods by Road and Rail. (7th edition)

Flammable Solids: Category 2

Signal Word (s)
WARNING

Hazard Statement (s)
H228 Flammable solid.

Page 1 / 10

© 2018 Kidde Australia Pty Ltd

Pictogram (s)
Flame



Precautionary statement – Prevention
P210 Keep away from heat/sparks/open flames/hot surfaces. – No smoking.
P240 Ground/bond container and receiving equipment.
P241 Use explosion-proof electrical/ventilating/lighting/equipment.
P280 Wear protective gloves/protective clothing/eye protection/face protection.

Precautionary statement – Response
P370+P378 In case of fire: Use water for extinction.

3. COMPOSITION/INFORMATION ON INGREDIENTS

Information on Composition
Product contains >=1% each of Potassium nitrate (CAS 7757-79-1), Dicyandiamide (Guanidine, cyano)(CAS 461-58-5) and Phenol, reaction products with formaldehyde (CAS 9003-35-4). Components are blended and pressed into a highly stable, molded form. Molded composition is contained within a sealed double-walled stainless steel housing – no environmental exposure.

4. FIRST-AID MEASURES

Inhalation
Possible exposure to aerosol suppression agent if generator is activated. If inhaled, remove affected person from contaminated area. Keep at rest until recovered. If symptoms develop and/or persist seek medical attention.

Ingestion
Unlikely due to form of product. However, if contents ingested, do not induce vomiting. Wash out mouth thoroughly with water. If symptoms develop seek medical attention.

Skin
Unlikely due to form of product. If exposure to contents occurs, wash affected area thoroughly with soap and water. If symptoms develop seek medical attention.

Eye contact
Unlikely due to form of product. If in eyes, hold eyelids apart and flush the eyes continuously with running water. Remove contact lenses. Continue flushing for several minutes until all contaminants are washed out completely. If symptoms develop and/or persist seek medical attention.

First Aid Facilities
Eyewash and normal washroom facilities.

Page 2 / 10

© 2018 Kidde Australia Pty Ltd

Advice to Doctor
Treat symptomatically.

Other Information
For advice in an emergency, contact a Poisons Information Centre (Phone Australia 13 1126) or a doctor at once.

5. FIRE-FIGHTING MEASURES

Suitable Extinguishing Media
Product is an extinguishing media. Use appropriate fire extinguisher for surrounding environment.

Hazards from Combustion Products
Under fire conditions this product may emit toxic and/or irritating fumes and gases including carbon dioxide, carbon monoxide and oxides of nitrogen.

Specific Hazards Arising From The Chemical
Ignition produces a fire-suppression aerosol. Water may be used as an additional suppression agent.

Hazchem Code
1Z

Decomposition Temperature
Not available

Precautions in connection with Fire
Fire fighters should wear Self-Contained Breathing Apparatus (SCBA) and full protective clothing to prevent exposure to vapours, fumes or products of combustion. Water spray may be used to cool down heat-exposed containers.

6. ACCIDENTAL RELEASE MEASURES

Emergency Procedures
If these devices are spilled they can be safely recovered by hand and should be inspected for damage prior to repacking. Suspect or damaged articles should be labeled and consigned for correct destruction. Wear appropriate personal protective equipment and clothing to prevent exposure. Dispose of waste according to the applicable local and national regulations. If contamination of sewers or waterways occurs inform the local water and waste management authorities in accordance with local regulations.

7. HANDLING AND STORAGE

Precautions for Safe Handling
Avoid sparks, shock, electrostatic discharges, heat and open flame. Ventilate area completely after discharge. Do not enter area prior to complete venting of enclosure. Wear appropriate protective equipment to prevent inhalation, skin and eye contact. Ensure a high level of personal hygiene is maintained when using this product. That is; always wash hands before eating, drinking, smoking or using the toilet.

© 2018 Kidde Australia Pty Ltd

Conditions for safe storage, including any incompatabilities
Store in a cool, dry, well-ventilated area, out of direct sunlight. Ensure that storage conditions comply with applicable local and Store in a cool, dry, well-ventilated area, out of direct sunlight and moisture. Ensure that storage conditions comply with applicable local and national regulations.

Storage Temperatures
Avoid storage at temperatures greater than 65°C

8. EXPOSURE CONTROLS/PERSONAL PROTECTION

Occupational exposure limit values
No exposure value assigned for this material. However, the available exposure limits for by-products are listed below:
Carbon monoxide
TWA : 30ppm, 34mg/m³
Nitrogen dioxide
TWA : 3ppm, 5.6mg/m³
STEL : 5ppm, 9.4mg/m³
Nitrous oxide
TWA : 25ppm , 45mg/m³
TWA (Time Weighted Average): The average airborne concentration of a particular substance when calculated over a normal eight-hour working day, for a five-day week.
STEL (Short Term Exposure Limit): The average airborne concentration over a 15 minute period which should not be exceeded at any time during a normal eight-hour workday.

Biological Limit Values
No biological limit allocated.

Appropriate Engineering Controls
Not required under normal conditions of use. Use approved engineering controls if exposure to gases is likely.

Respiratory Protection
Ventilate area completely after discharge. Do not enter area prior to complete venting of enclosure. Use filter mask as necessary during clean-up. Reference should be made to Australian/New Zealand Standards AS/NZS 1715, Selection, Use and Maintenance of Respiratory Protective Devices; and AS/NZS 1716, Respiratory Protective Devices, in order to make any necessary changes for individual circumstances.

Eye Protection
Safety glasses with side shields or chemical goggles should be worn. Final choice of appropriate eye/face protection will vary according to individual circumstances. Eye protection devices should conform with Australian/New Zealand Standard AS/NZS 1337 - Eye Protectors for Industrial Applications.

Hand Protection
Gloves of impervious heat resistant material is recommended if handling hot product. Final choice of appropriate gloves will vary according to individual circumstances i.e. methods of handling or according to risk assessments undertaken. Reference should be made to AS/NZS 2161.1: Occupational protective gloves - Selection, use and maintenance.

Body Protection
Suitable workwear, e.g. cotton overalls buttoned at neck and wrist should be worn.

© 2018 Kidde Australia Pty Ltd

9. PHYSICAL AND CHEMICAL PROPERTIES

Appearance
Stainless Steel Cylinder up to 270 mm in length. The cylinder contains the pressed moulded composition.

Colour
Beige to white in colour. (moulded composition)

Odour
None

Decomposition Temperature
Not available

Melting Point
Not available

Boiling Point
Not available

Solubility in Water
Slightly soluble (moulded composition)

Specific Gravity
Not available

pH
Not available

Vapour Pressure
Not available

Vapour Density (Air=1)
Not available

Evaporation Rate
Not available

Odour Threshold
Not available

Viscosity
Not available

Partition Coefficient: n-octanol/water
Not available

Flash Point
Not available

© 2018 Kidde Australia Pty Ltd

Flammability
Flammable solid

Auto-Ignition Temperature
300°C (moulded composition)

Flammable Limits - Lower
Not available

Flammable Limits - Upper
Not available

Kinematic Viscosity
Not available

Dynamic Viscosity
Not available

10. STABILITY AND REACTIVITY

Reactivity
Not available

Chemical Stability
These devices are extremely stable below 125°C.

Conditions to Avoid
Should be protected from fire, sources of electrical power, static discharge, shock, and high temperatures.

Incompatible materials
Not available

Hazardous Decomposition Products
Thermal decomposition may result in the release of toxic and/or irritating fumes and gases including carbon dioxide, carbon monoxide, and oxides of nitrogen.

Hazardous Polymerization
Will not occur.

11. TOXICOLOGICAL INFORMATION

Toxicology Information
No toxicity data available for this material.

Ingestion
Unlikely due to form of product. However if ingested, ingestion of material may irritate the gastric tract causing nausea and vomiting.

© 2018 Kidde Australia Pty Ltd

Inhalation
None expected, when used as intended. However, exposure to aerosol suppression agent if generator is activated, may cause temporary, mild irritation of mucous membrane if inhaled.

Skin
Unlikely due to form of product. However, if damaged, skin contact with material may cause redness, itching and irritation.

Eye
Unlikely due to form of product. However, if damaged, eye contact with material may cause irritation, tearing, stinging, blurred vision, and redness.

Respiratory sensitisation
Not expected to be a respiratory sensitiser.

Skin Sensitisation
Not expected to be a skin sensitiser.

Germ cell mutagenicity
Not considered to be a mutegenic hazard.

Carcinogenicity
Not considered to be a carcinogenic hazard.

Reproductive Toxicity
Not considered to be toxic to reproduction.

STOT-single exposure
Not considered to cause toxicity to a specific target organ.

STOT-repeated exposure
Not considered to cause toxicity to a specific target organ through prolonged or repeated exposure.

Aspiration Hazard
Not expected to be an aspiration hazard.

12. ECOLOGICAL INFORMATION

Ecological information
These devices are sealed and present no ecological hazards. The aerosol produced upon ignition has no global warming potential and an ozone depletion potential = 0.

Ecotoxicity
No ecological data are available for this material.

Persistence and degradability
Not available

Mobility
Not available

© 2018 Kidde Australia Pty Ltd

Bioaccumulative Potential
Not available

Environmental Protection
Prevent this material entering waterways, drains and sewers.

13. DISPOSAL CONSIDERATIONS

Disposal considerations
Dispose of waste according to applicable local and national regulations.

14. TRANSPORT INFORMATION

Transport Information
Road and Rail Transport (ADG Code):
This material is classified as Dangerous Goods Division 4.1 Flammable Solids according to the Australian Code for the Transport of Dangerous Goods by Road and Rail (7th edition).
Division 4.1 Dangerous Goods are incompatible in a placard load with any of the following:
- Class 1, Explosives
- Division 2.1, Flammable Gases
- Division 4.2, Spontaneously Combustible Substances
- Division 5.1, Oxidising substances
- Division 5.2, Organic Peroxides
- Class 7, Radioactive Substances

Classified as Dangerous Goods by the criteria of the International Maritime Dangerous Goods Code (IMDG Code) for transport by sea.
Class/Division: 4.1
UN No: 3178
Proper Shipping Name: FLAMMABLE SOLID, INORGANIC, N.O.S. (CONTAINS POTASSIUM NITRATE)
Packing Group: III
EMS: F-A, S-G
Special Provisions: 223, 274, 915

Air Transport (ICAO/IATA):
Classified as Dangerous Goods by the criteria of the International Air Transport Association (IATA) Dangerous Goods Regulations for transport by air.
Class/Division: 4.1
UN No: 3178
Proper Shipping Name: Proper Shipping Name: FLAMMABLE SOLID, INORGANIC, N.O.S. (CONTAINS POTASSIUM NITRATE)
Packing Group: III
Packaging Instructions (passenger & cargo): 446
Packaging Instructions (cargo only): 449
Hazard Label: Flammable Solid
Special Provisions: A3, A803

U.N. Number
3178

© 2018 Kidde Australia Pty Ltd

UN proper shipping name
FLAMMABLE SOLID, INORGANIC, N.O.S.(CONTAINS POTASSIUM NITRATE)

Transport hazard class(es)
4.1

Packing Group
III

Hazchem Code
1Z

EPG Number
4A1

IERG Number
20

IMDG Marine pollutant
No

15. REGULATORY INFORMATION

Regulatory information
Classified as Hazardous according to the Globally Harmonised System of Classification and labelling of Chemicals (GHS) including Work, Health and Safety regulations, Australia.
Classified as a Scheduled Poison according to the Standard for the Uniform Scheduling of Medicines and Poisons (SUSMP).

Poisons Schedule
S6

Australia (AICS)
All components of this product are listed on the Inventory or exempted.

16. OTHER INFORMATION

Date of preparation or last revision of SDS
SDS Created: March 2015

References
Preparation of Safety Data Sheets for Hazardous Chemicals Code of Practice.
Standard for the Uniform Scheduling of Medicines and Poisons.
Australian Code for the Transport of Dangerous Goods by Road & Rail.
Model Work Health and Safety Regulations, Schedule 10: Prohibited carcinogens, restricted carcinogens and restricted hazardous chemicals.
Workplace exposure standards for airborne contaminants, Safe work Australia.
American Conference of Industrial Hygienists (ACGIH).
Globally Harmonised System of classification and labelling of chemicals.

© 2018 Kidde Australia Pty Ltd

END OF SDS

© Copyright Chemical Safety International Pty Ltd

Copyright in the source code of the HTML, PDF, XML, XFO and any other electronic files rendered by an Infosafe system for Infosafe MSDS displayed is the intellectual property of Chemical Safety International Pty Ltd.
Copyright in the layout, presentation and appearance of each Infosafe MSDS displayed is the intellectual property of Chemical Safety International Pty Ltd.
The compilation of MSDS's displayed is the intellectual property of Chemical Safety International Pty Ltd.
Copying of any MSDS displayed is permitted for personal use only and otherwise is not permitted. In particular the MSDS's displayed cannot be copied for the purpose of sale or licence or for inclusion as part of a collection of MSDS without the express written consent of Chemical Safety International Pty Ltd.

© 2018 Kidde Australia Pty Ltd

Feedback form

Kidde	**Your feedback …**	Stat-X®

We welcome your feedback regarding the Design, install, commission and maintenance manual for Aerosol fire suppression systems for vehicle and marine applications. If you have any recommendations for improvement to this manual, please provide details using this form. Send the completed form to Kidde Australia Pty Ltd – email to Kane.Ng@kidde.com.au

About you …	
Name	
Organisation	
Organisation address	
Contact phone number	
Email address	

About this manual …						
Manual title	Design, install, commission and maintenance manual for Aerosol fire suppression systems for vehicle and marine applications					
Version number	Version 2.2					
How do you rate this manual? (circle response)	Excellent	Good	Fair	Poor	Complete	Incomplete
What type of feedback do you want to leave? (✓)	☐ Problem	☐ Question	☐ Suggestion	☐ Comment		

Your recommended changes to this manual …					
Page no.	**Paragraph no.** (from top of page)	**Paragraph line no.**	**Figure no.**	**Column no.**	**Recommended change and your reason(s)**

Office use only			
Receive date	**Action(s) required**	**Priority**	**Comments**

© 2018 Kidde Australia Pty Ltd